World champion: network analyzer with 24 ports

Fig. 1: On the right: The new R&S®ZNBT8 network analyzer with 24 ports for simultaneous multiport measurements maintaining the highest standards of performance. In terms of measurement speed, the R&S®ZNBT8 outperforms even the fast switch matrix based solution delivered by Rohde&Schwarz, which includes the R&S®ZNB and the R&S®ZN-Z84 (shown on the left).

Twenty-four ports in a single network analyzer, each with the performance of a fast two-port analyzer – you won't find that anywhere but at Rohde & Schwarz. This opens up entirely new options in development and production, such as rapid and precise measurements on a DUT with 24 ports in a single sweep or division of ports into groups for simultaneous measurements on multiple DUTs.

Meeting the increased demands made on measurement accuracy and throughput in development and production of multiport components for smartphones and tablets, the R&S®ZNBT8 (Fig. 1) is the first commercially available network analyzer with 24 ports. It covers the frequency range from 9 kHz to 8.5 GHz. It has been designed for use in the development and production of active and passive multiport components, such as for mobile radio and for GPS, WLAN and Bluetooth® modules.

Multiport measurements made easy

The R&S®ZNBT8 has been designed for use in automated systems and can be remotely controlled via GPIB or LAN, for example. Manual control is also possible after connecting a monitor, mouse and keyboard. Users can benefit from the same intuitive user interface as that implemented in the R&S®ZNB network analyzers. Every aspect of the R&S®ZNBT8 software architecture was designed for multiport applications. The user selects measurement quantities such as S-parameters, waves and wave ratios directly via the user interface. All analyzer functions can be accessed in no more than three operating steps, even when testing DUTs with a large number of ports, because the test port indices for S-parameters and power levels can be entered directly (Fig. 2).

Cross-platform compatibility

The R&S®ZNBT8 is based on the same platform as the R&S®ZNB analyzer, with identical user interface and remote control commands. It can also emulate the remote control commands from the R&S®ZVA, R&S®ZVB and R&S®ZVT analyzer families, and can therefore be used to exchange analyzers or to upgrade a test system without making laborious changes to the system software.

True multiport architecture for maximum performance

The uncompromising, true multiport architecture of the R&S®ZNBT8 with one reflectometer per test port delivers excellent RF characteristics. This design does away with electronic switches between the test ports and receivers typically found in switch matrix based multiport systems and eliminates the associated loss which degrades the RF characteristics. Thanks to this elaborate architecture, users can benefit from a wide dynamic range, high output power and very good power handling capacity. Multiport measurements with the R&S®ZNBT8 are highly stable, reproducible and precise.

The base model, with four test ports, can optionally be expanded to include additional ports (Fig. 3) up to a maximum of 24 in order to precisely meet the requirements of any measurement task in a production environment.

Fig. 2: Fast S-parameter selection by direct entry of test port indices.

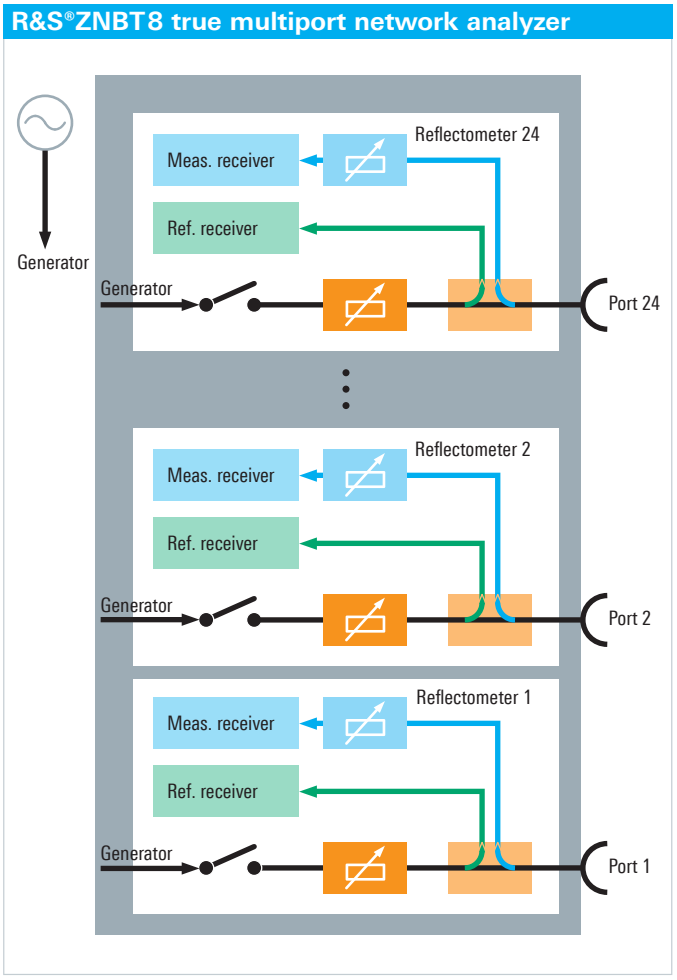

Fig. 3: True multiport architecture is the key to the excellent RF characteristics of the R&S®ZNBT8.

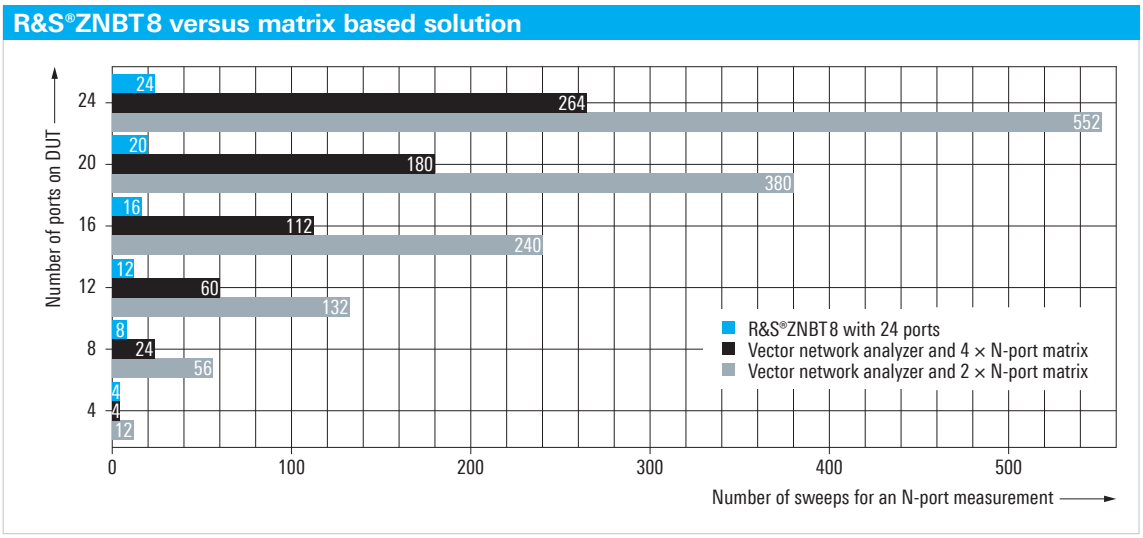

Fig. 4: Measurement time: the R&S®ZNBT8 versus matrix based multiport solutions.

Unrivaled short measurement times

The instrument's multiport architecture makes it possible to perform simultaneous measurements on all ports of a DUT. Data from all ports is captured synchronously and processed in parallel from the RF test port through the IF stage to the display – thereby significantly reducing the measurement time as compared with matrix based multiport systems. For example, only 24 sweeps are needed to measure all S-parameters of a 24-port DUT. A matrix based solution with a four-port network analyzer, by contrast, requires multiple switching operations and a total of 264 sweeps. At a measurement time of e.g. 5 ms per sweep*, a four-port R&S®ZNB network analyzer with a matrix requires 1.3 s. The R&S®ZNBT8, however, is nearly four times faster at just 340 ms. Fig. 4 highlights the gain in speed with the R&S®ZNBT8 as compared with matrix based solutions.

* 201 points, 100 kHz IF bandwidth, start at 800 MHz, stop at 1 GHz.

The R&S®ZNBT8 features a dynamic range 10 dB higher than that of conventional multiport solutions. This means that, for the same dynamic range, the R&S®ZNBT8 delivers an IF bandwidth ten times larger and measures up to ten times faster than conventional setups. For example, for a sweep with 80 dB dynamic range at 1 MHz IF bandwidth covering 201 points, the R&S®ZNBT8 requires no more than 6 ms.

12 network analyzers in a single box measure 12 DUTs in parallel

The architecture of the R&S®ZNBT8 makes it possible to stimulate all DUT ports simultaneously in order to measure multiple paths on a single DUT or to measure multiple DUTs in parallel (Fig. 5). The analyzer organizes its test ports into groups and runs the measurements for each group in parallel. A 24-port R&S®ZNBT8, for example, can simultaneously test six DUTs with four ports each or 12 DUTs with two ports each. This saves not only time and money, but also space in the test setup.

Fig. 5: Measuring multiple DUTs in parallel with the R&S®ZNBT8.

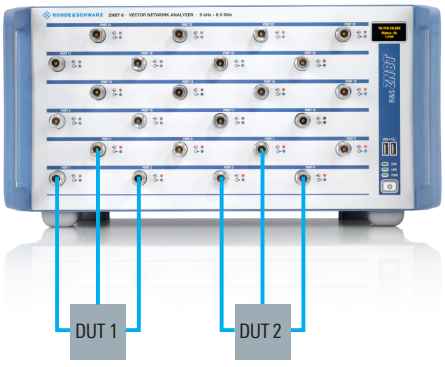

Excellent measurement characteristics

Offering up to 140 dB dynamic range for measurements between all ports, the R&S®ZNBT8 is the best commercially available multiport network analyzer and can also be used for measuring high-blocking DUTs. Its wide, electronically variable output power range from –85 dBm to +13 dBm permits fast analysis of linear and nonlinear amplifier characteristics. Electronic step attenuators in the receiver paths increase the 0.1 dB compression point to +27 dBm. They operate wear-free, providing a particular boost to measurement speed and long instrument life in production environments.

The R&S®ZNBT8 features independent synthesizers for its generators and receivers, enabling it to transmit and receive on different frequencies. This allows the R&S®ZNBT8 to measure harmonics and intermodulation products on amplifiers, or conversion loss on mixers. Wizards guide the user through the required settings and calibrations (Fig. 6). Any external generators that may be needed to deliver multitone signals or provide local oscillator functionality for a mixer are controlled by the R&S®ZNBT8 via LAN or GPIB.

Summary

The R&S®ZNBT8 is the world's first network analyzer with 24 test ports. Offering superior accuracy, speed, long-term stability and dynamic range, it outperforms switch matrix based multiport systems when carrying out measurements on active and passive multiport DUTs.

Thilo Bednorz

Features for amplifier and mixer measurements

- High output power (typ. +15 dBm) on all ports
- Large power sweep range (typ. 100 dB)
- High 0.1 dB compression point of receivers (typ. > 27 dBm)
- Intermodulation, harmonics and compression measurements
- Absolute power measurements
- Four DC inputs for measuring supply currents and power detector characteristics
- Power added efficiency (PAE) measurements
- Measurement of stability factors
- Determination of Y- and Z-parameters
- Conversion loss measurements on mixers

Features for filter measurements

- Wide dynamic range (up to 140 dB)
- Display of filter parameters, e.g. center frequency, bandwidth, quality factor
- Determination of mixed-mode S-parameters of balanced DUTs
- Virtual matching networks for real-time embedding/deembedding of balanced and unbalanced DUTs
- Impedance conversion
- Time domain analysis with gating function, e.g. for suppressing triple transit echo in SAW filters

Fig. 6: Wizards for intermodulation and mixer measurements.