Convenience in the lab: LTE fading simulator for the R&S®CMW500

The combination of the R&S®AMU200A fading simulator and the R&S®CMW500 wideband radio communication tester is the ideal solution for the sophisticated user-defined simulation of fading conditions. However, if the main focus is on routine measurements in accordance with the LTE fading profiles defined by 3GPP, the R&S®AMU200A is not required: The R&S®CMW500 can simulate fading and AWGN with the new R&S®CMW-KE100 and R&S®CMW-KE500 options.

Internal fading simulator in the R&S®CMW500: convenient and time-saving

Practically any standard-compliant and user-defined simulations of the fading characteristics of radio channels can be carried out with an external baseband signal generator and fading simulator such as the R&S®AMU200A from Rohde&Schwarz. The instrument has a convenient user interface that has been optimized for this purpose and helps users to quickly and reliably define the many parameters that need to be set.

However, in everyday lab operations the main focus is not always on such sophisticated user-defined simulations of fading conditions. In many cases, routine tests using defined fading profiles from the test specifications including additive white Gaussian noise (AWGN) are sufficient. For such tests, users obviously prefer performing the most important receiver measurements directly using the radiocommunications tester.

For this reason, Rohde&Schwarz has developed an integrated fading simulator for the R&S®CMW500 wideband radio communication tester. The simulator allows the user to select the required defined fading profiles from the test specifications and measure the data throughput, the block error rate and the channel characteristics (e.g. CQI).

The new option provides a high degree of convenience, since the fading simulator is fully integrated in the user interface and the remote control command set of the R&S®CMW500. The tester superimposes the fading profile onto the downlink signals in the baseband, before mixing them onto the carrier frequency. Power calibration by the user is not necessary, because the tester internally balances the insertion loss that the fading module applies to the downlink signal.

In remote control operation, the internal fading simulator is configured using commands that correspond to the signaling syntax, but are essentially compatible with the commands of the R&S®AMU200A. This is documented by the following example of the remote control command, which calls up the "extended vehicular A" fading profile with 5 Hz Doppler frequency and medium MIMO correlation for LTE:

For the R&S®AMU200A

SOURce<hw>:FSIMulator:STANdard EV5Medium

For the R&S®CMW500

CONFigure:<FWA>:FADing:FSIMulator:STANdard EV5Medium

Fading simulation with the R&S®AMU200A – the comprehensive solution for all requirements

The 3GPP standardization committee has adopted test specifications that define fading profiles for the different mobile radio standards to be used in receiver tests. These include fading profiles for the following standards:

- **LTE** TS 36.101 annex B,
- **WCDMA** TS 25.101 annex B.2,
- **GSM** TS 45.005 annex C.3.

The R&S®AMU200A baseband signal generator and fading simulator supports all of the fading profiles defined in the test specifications of the respective mobile radio standards. When it comes to performing user-specific tests, the R&S®AMU200A is indispensable. It allows users to select the parameters of a fading profile and define task-specific profiles.

To perform the measurements together with the R&S®CMW500, the R&S®AMU200A is connected to the tester via the digital TVR290 interface. The R&S®AMU200A fades the downlink signal and adds the AWGN. This is all done digitally in the baseband.

Fading initially for LTE

The R&S®CMW500 internal fading simulator is initially available for LTE signaling. Figs. 1 and 2 show the supported fading profiles and the user interface. Tests with fading are indispensable, particularly in combination with the MIMO functionality of LTE, because MIMO reception depends very much on the channel characteristics. Moreover, the support of MIMO is mandatory for all LTE terminals in category 2 and above.

The fading simulator can simulate the correlation between the individual propagation paths. The correlation is used at three levels in the 3GPP profiles: low, medium, high. Depending on the intensity of the correlation, it is advisable to use transmit diversity (transmission mode 2) or spatial multiplexing (transmission modes 3, 4) in LTE.

Fig. 3 shows that with identical fading profiles, measurements using the R&S®CMW500 with the internal fading simulator produce practically the same results as measurements using the R&S®AMU200A: There is virtually no difference between the traces of the block error rate versus the signal-to-noise ratio.

Supported fading profile	Number of channel taps	Delay spread (RMS)	Doppler frequency	MIMO correlation
Extended pedestrian A (EPA)	7	45 ns	5 Hz	Low Medium High
Extended vehicular A (EVA)	9	357 ns	5 Hz 70 Hz	Low Medium High
Extended typical urban (ETU)	9	991 ns	70 Hz 300 Hz	Low Medium High
Channel quality indicator (CQI)	2	318 ns	0 Hz and 5 Hz	–
High-speed train (HST, end of 2012))	1	–	750 Hz	–

Fig. 1 The profiles supported by the internal fading simulator of the R&S®CMW500.

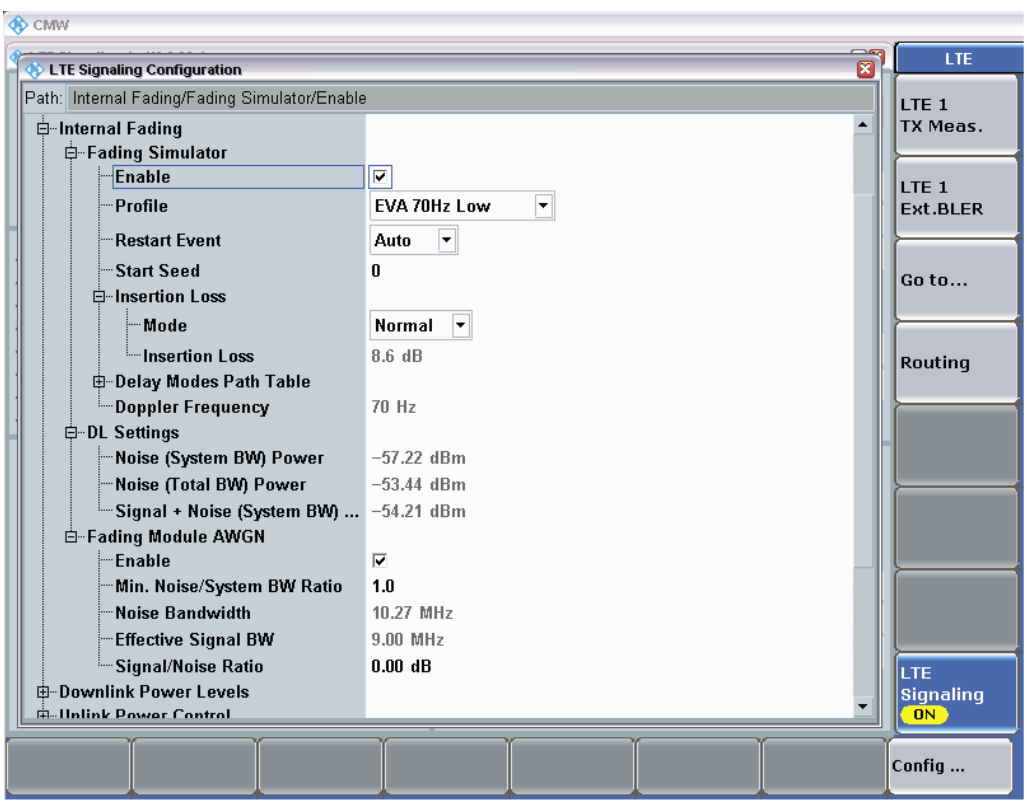

Fig. 2 The user interface of the fading simulator in the R&S®CMW500.

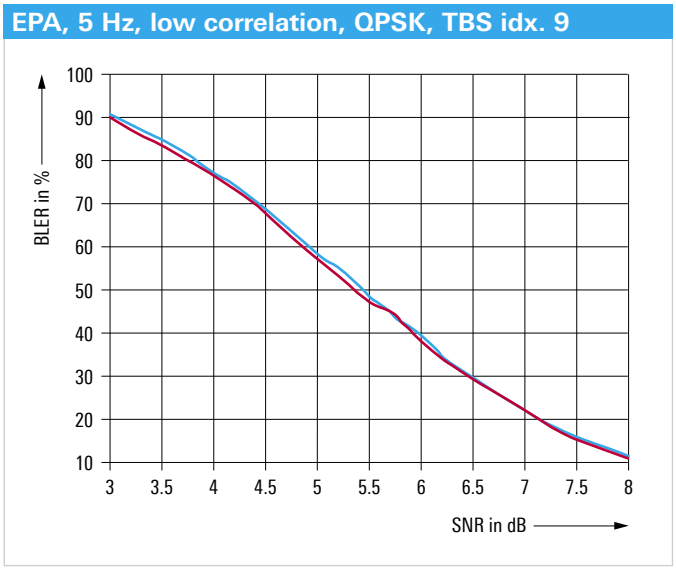

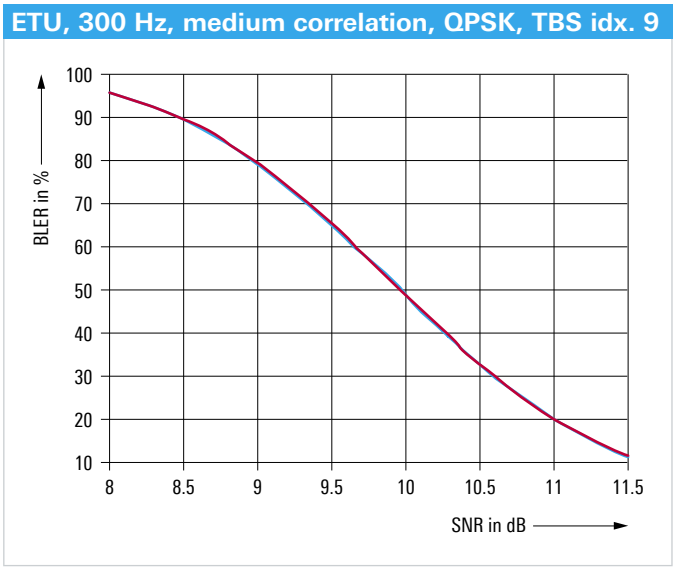

Fig. 3 Comparison of block error rate measurements for different fading profiles, using the internal fading simulator of the R&S®CMW500 (red) and the R&S®AMU200A fading simulator (blue). TBS idx. 9: transport block size index.

Summary

The fading simulator for the R&S®CMW500 provides the 3GPP fading profiles for LTE receiver tests. The simulator is an ideal alternative for users who wish to utilize signaling and fading in a convenient and user-friendly way in a single instrument, at an attractive price. To support the multistandard capability of the R&S®CMW500, the simulator is planned to be also offered for other mobile radio standards (2G, 3G, CDMA2000® 1xEV-DO).

Thomas Braun; Stefan Schmidt

Fading – the most important details in brief

A common model for emulating a mobile radio channel is the tapped delay line. The model is generated using a finite impulse response (FIR) filter with time-dependent filter coefficients (Fig. 4). It takes into account that clusters of partial waves of a certain delay τ are formed in real propagation scenarios, which results in smearing of the receive signal in the time domain (delay spread). In addition, the Doppler effect causes smearing of the receive signal in the frequency domain (Doppler spread). This is taken into account in the model by means of suitable spectral forming of the filter coefficients. The Clark bathtub model, often called the classic Doppler spectrum, is typically used here. If the real and imaginary parts of the filter coefficients have Gaussian distribution, this is referred to as Rayleigh fading. Another important aspect of mobile radio channel simulators is additive white Gaussian noise (AWGN).

A fading channel of this type is found between every pair of transmit and receive antennas in MIMO systems. These channels are not usually independent, but have a statistical correlation. The correlation is dependent upon various parameters, e.g. the type of the antenna arrays at the transmitter and the receiver, the radiation patterns and the distance between the antenna elements, as well as the main reception directions and the power distribution.

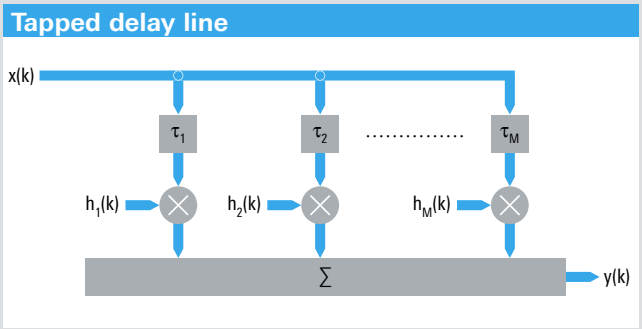

Fig. 4 FIR fading channel model.