Radio conformance test systems ready for MIMO

Future mobile communications systems will have to provide high transmission rates for Internet and video applications. Advanced spatial multiplexing techniques such as MIMO offer the capabilities required. Now, the first RC test systems are available from Rohde & Schwarz for testing the corresponding base stations and terminal devices.

Combating data jams with MIMO

Multiple input multiple output (MIMO) systems represent a solution for increasing data rates for advanced mobile Internet and video applications and for improving error protection. These systems use multiple antennas at both the transmitter and receiver end (see box below).

Ready for MIMO: R&S®TS8970 WiMAX™ RCT as an example

The Worldwide Interoperability for Microwave Access (WiMAX™) wireless standard offers effective transmission rates of up to 30 Mbit/s (see article on page 12). In order to ensure this high-speed data transmission even under fading would no longer be possible in a SISO system. This is where the advantages of MIMO systems come into play: Their receiving antennas allow them to receive multiple signals with different delays so that the bit stream can even be decoded when one of the signals is suppressed.

When the R&S®AMU200A baseband signal generator and fading simulator is equipped with the R&S®AMU-K74 fading split mode option [1] and two external I/Q inputs, it is possible to emulate a complete 2×2 MIMO channel by using two RF output stages. MIMO-typical merging of the transmitted signals at the receiving antennas takes place in the R&S®AMU200A after the fading modules (FIG 2).

MIMO – a brief overview In contrast to single input single output (SISO) systems, which use only one antenna each for the transmitter and the receiver, MIMO systems use multiple antennas for both the transmitter and the receiver (FIG 1). This means that they enable the use of (radio) space (spatial division multiplexing) for coding the transmitted signal. During transmission, the different signals reach the receiving antennas in different ways, and they are subjected to different attenuation and fading factors along the path. Under ideal circumstances, all transmitted signals arrive at all receiving antennas. In real transmission channels, however, each signal undergoes superposition at the receiver due to multipath propagation. In a worst-case scenario, this can completely suppress a signal. Under such conditions, reception

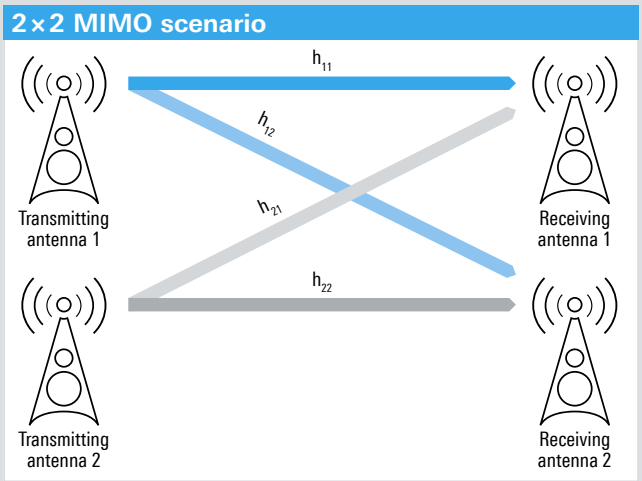

FIG 1 2×2 MIMO: two antennas at the transmitter and two antennas at the receiver. Both receiving antennas receive the signals from both transmitting antennas. This leads to four different transmission paths, which can have different fading and attenuation characteristics. These paths are described by the MIMO channel matrix *H* with the elements h_{11}, h_{12}, h_{21} and h_{22}.

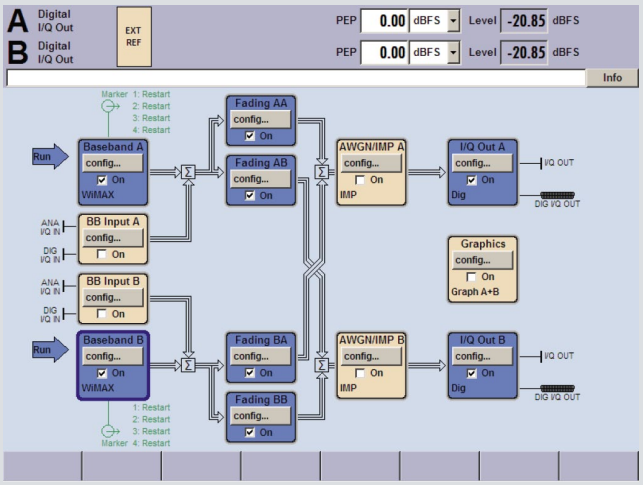

FIG 2 Representation of a 2×2 MIMO transmission on the display of an R&S®AMU200A: The two transmitted baseband A and B signals each pass two fading modules, which represent the two transmission paths from one transmitting antenna to the two receiving antennas. The paths are then linked to simulate typical MIMO transmission paths.

conditions, WiMAX™ employs the MIMO technique. For testing mobile stations and base stations under fading conditions, the Rohde&Schwarz portfolio includes, for example, the R&S®TS8970 Mobile WiMAX™ radio conformance test system (FIG 3). It was the first test system with MIMO measurement functionality on the market.

The WiMAX Forum® integrated all the required tests into the Mobile Radio Conformance Test Specification (MRCT) [2]. For WiMAX™, MIMO 2×2 (two transmitting and two receiving antennas) is specified for the downlink with two different MIMO transmission methods:

- Transmit diversity with space time coding according to Alamouti (Matrix A) [3]
- Spatial multiplexing (Matrix B) [4]

When using Matrix A, the signal is changed slightly and transmitted by both transmitting antennas. When channel conditions are unfavorable, this dual transmission provides a better error protection than SISO systems. Matrix B, however, sends different signals via the two transmitting antennas. When channel conditions are very good, the Matrix B method makes it possible to transmit data twice as fast as with SISO systems.

In the WiMAX™ MS 22.2 test case, for example, the packet error ratio (PER) and the physical carrier to interference plus noise ratio (PCINR) are used as the quality criteria for MIMO transmission. The transmission conditions vary for this test case, for example, in the following parameters:

- Fading profile (pedestrian, 3 km/h; motor vehicles, 60 km/h and 120 km/h)
- Correlation of MIMO channels
- Modulation
- Code rate

The MS 22.2 test case consists of two parts (A and B) with a total of six test cases that allow all kinds of configurations to be tested using Matrix A and Matrix B:

- Part A: measurement of the packet error ratio (PER)
  - Test case A1: Matrix A (same power levels received at both antennas)
  - Test case A2: Matrix B (same power levels received at both antennas)
  - Test case A3: Matrix B (different power levels received at the two antennas)
  - Test case A4: mode selection: selection of Matrix A and Matrix B through mobile station feedback depending on the channel status
- Part B: measurement of the signal quality (PCINR) using an interfering signal
  - Test case B1: Matrix A
  - Test case B2: Matrix B

WiMAX™ MS 22.2 test case, part A

The first two test cases, A1 and A2, examine the capability of a WiMAX™ mobile station to demodulate and decode a MIMO signal using Matrix A or Matrix B. In test case A3, the power received at one of the two receiving antennas is moreover reduced by 4 dB. As a result, half of the symbols sent are transmitted via a lower-quality channel. Under certain circumstances, the mobile station is not able to decode disrupted symbols, which increases the packet error ratio. Due to the use of Matrix B, the mobile station is not able to reconstruct the faulty symbols from the signal received by the other antenna.

FIG 3 Example: The R&S®TS8970 WiMAX™ radio conformance test system with MIMO test functionality.

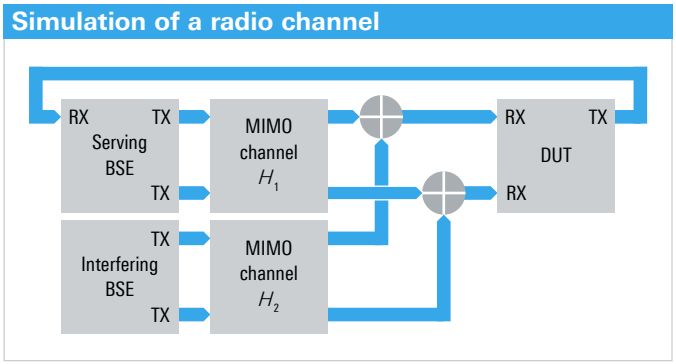

FIG 4 Simulation with a wanted MIMO signal and an interfering MIMO signal.

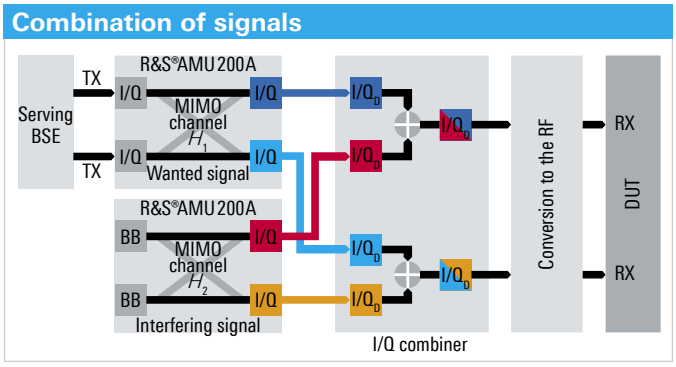

FIG 5 The software-controlled I/Q combiner in the test system is able to automatically set all of the signal paths required for SISO or for MIMO.

Matrix A and Matrix B offer different advantages depending on the channel quality. When channel conditions are unfavorable, Matrix A reduces the transmission error ratio. Matrix B boosts data throughput when channel conditions are good. With test case A4, the MIMO transmission method is adapted to the channel conditions. The base station transmits part of the data in burst 1 with the modulation, channel coding and MIMO method that the mobile station suggests for the given channel quality. The remaining transmission data uses the corresponding settings in burst 2 with the next-highest spectral efficiency; consequently, it exceeds the required error ratio. The packet error ratios, which are determined separately for the two bursts, decide whether or not the mobile device has passed test case A4.

WiMAX™ MS 22.2 test case, part B

The test case in which both the wanted signal and the interfering signal are transmitted to the device under test (DUT) via a MIMO transmission link with specific fading profiles presents a particular challenge for simulating the radio channel (FIG 4). Here, four MIMO signal paths (wanted and interfering signal) have to be mapped on two antennas. In the R&S®TS8970, two R&S®AMU200A signal generators simulate the MIMO channels (H_1, H_2) with the required fading profiles.

Turn four into two: I/Q combiner merges signals

The resulting four digital I/Q streams at the R&S®AMU200A's two outputs contain the information for the H_1 and H_2 MIMO channels. In the next step, the I/Q data is passed on to an I/Q combiner, which adds the wanted signal and the interfering signal for the corresponding antenna configuration (FIG 5). In the final step, the data is converted to the RF before finally being fed to the DUT.

Summary

The R&S®TS8970 test system generates MIMO signals, including fading, for the receiving antennas of the DUTs. Signal generation in the baseband enables the use of a compact, software-controlled I/Q combiner that automatically sets the required signal paths for both SISO and MIMO. In addition, the system configuration contains all components for testing wanted signals for up to 4×2 MIMO scenarios. The R&S®TS8970's MIMO measurement functionality and the possibility of using it for future test cases safeguards the investment in the long term.

The upcoming Long Term Evolution (LTE) wireless communications standard also employs MIMO for boosting the data rate. The R&S®TS8980 LTE test system can test mobile devices in accordance with the RF test specification [5] for LTE, which defines test cases for 4×2 MIMO scenarios. Rohde&Schwarz offers customers who are using the R&S®TS8970 test system inexpensive conversion to the R&S®TS8980 for LTE.

Dr. Thomas Brüggen; Siegfried Friesinger

References
[1] R&S®SMU200A / R&S®AMU200A generators: MIMO receiver tests. News from Rohde&Schwarz (2007) No. 193, pp. 9–10.
[2] Mobile Radio Conformance Tests (MRCT), Specification 2.2.1, p. 179 pp., WiMAX Forum® 2008.
[3] From SISO to MIMO – taking advantage of everything the air interface offers (part 1). News from Rohde&Schwarz (2007) No. 192, pp. 16–19.
[4] From SISO to MIMO – taking advantage of everything the air interface offers (part 2). News from Rohde&Schwarz (2007) No. 194, pp. 4–7.
[5] Test specification 3GPP 36.521-1, "User Equipment (UE) conformance specification, radio transmission and reception, Part 1: Conformance Testing".