Signals for HSPA+ tests? No problem with generators from Rohde & Schwarz

The two new K59 and K259 options allow Rohde & Schwarz generators* to generate signals for testing HSPA+-ready devices.

Ideal for HSPA+ tests

Ongoing development of the proven 3GPP standard for UMTS networks requires that the tests carried out during development, production and servicing of mobile user equipment, chipsets as well as base stations be updating. The expansions through releases 7 and 8 have led to technologies such as MIMO (see box below).

Naturally, Rohde & Schwarz signal generators are keeping up with these developments — in this case, the new K59 and K259 software options have been added to the existing options for HSDPA (K43 or K243) and HSUPA (K45 or K245).

These new options mean that all of the advantages of these generators — including, for example, the ability to automate test procedures easily using remote control functionality — are also available for HSPA+ tests.

The usual flexibility in configuring the individual 3GPP channels is also seen when generating HSPA+ signals. Multiple base stations can be set for the downlink simulation and likewise multiple mobile stations for the uplink simulation. The software options add HSPA+ functionality to the channels that have already been made part of the 3GPP standard by HSDPA and HSUPA.

* The options are available for the following signal generators: R&S®SMU200A, R&S®SMJ100A, R&S®SMATE200A, R&S®SMBV100A, R&S®AMU200A and R&S®AFQ100A.

HSPA+ at a glance

After significant expansions to the 3GPP standard through HSDPA (release 5) and HSUPA (release 6), releases 7 and 8 push the boundaries even further: The keywords HSPA+ and HSPA evolution define a set of features that make it possible to increase the peak data rate considerably while reducing latency times. The most important of these features are:

Downlink MIMO
Multiple input, multiple output (MIMO) transmission makes use of multiple transmit and receive antennas. This method takes advantage of the spatial dimension of a transmission channel (spatial multiplexing) to enlarge the channel capacity — permitting an improvement in the transmission quality or the data rate. In the case of HSPA+, two transmit antennas at the base station and two receive antennas at the user equipment (UE) (called 2 × 2 MIMO) increase data throughput while using the same number of WCDMA channels.

64QAM in the downlink and 16QAM in the uplink
Higher order modulation (HOM) allows higher bit rates while maintaining the same symbol rate. HSDPA has already made use of 16QAM in the downlink. With HSPA+, 64QAM is now possible in the downlink and 16QAM in the uplink (composed of four-level pulse amplitude modulation (4PAM) in the in-phase and quadrature path). Combining MIMO and 64QAM in release 8 makes downlink peak data rates of 42 Mbit/s possible.

Continuous packet connectivity (CPC)
From the standpoint of a mobile services user, it is desirable that connections be continuously maintained, e.g. in order to open an Internet site without any delay or to use chat and messenger services (always-on feeling). However, these permanent connections take up a lot of resources, and the continuous transmission of the control messages needed to keep these connections intact can also reduce the quality of other connections.

HSPA+ now allows users to remain connected to the base station with minimal use of control messages. The features developed for this are combined under the keyword continuous packet connectivity (CPC).

In order to make MIMO, higher order modulation and CPC possible, HSPA+ will also make changes to the MAC layer, the control channels and the channel coding.

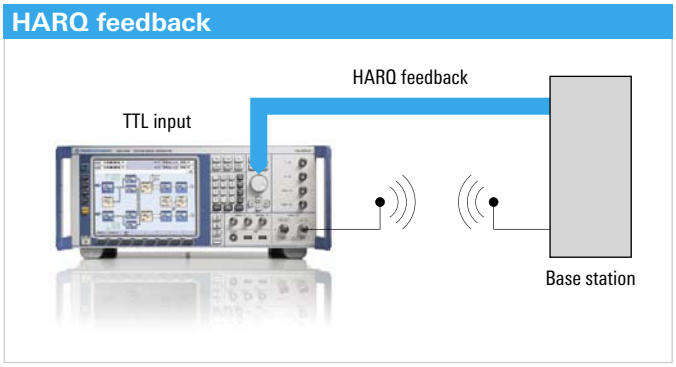

FIG 1 The signal generator receives HARQ feedback from the base station via a TTL input.

16QAM for uplink tests — also with HARQ feedback

HSPA+ uplink tests require 16QAM signals in the HSUPA data channels. The signal generators can now generate these signals and therefore also the new fixed reference channel 8 (FRC 8), which uses 16QAM. Like FRCs 1 to 7, FRC 8 is generated with complete channel coding.

When base stations receive data packets with errors, they request a resend of the transmitted packets (hybrid automatic repeat request (HARQ)). Even if the resent packets are received with errors again, the base station can often combine the received data into an error-free packet (soft combining). To test whether this complex mechanism works correctly in the base station, the R&S®SMU200A, R&S®SMJ100A, R&S®SMATE200A and R&S®AMU200A generators can receive feedback from the base station via a TTL input (HARQ feedback, FIG 1). The generator uses this feedback to determine in realtime whether new data can be sent in the FRC or whether the packets need to be resent to the base station.

Test signals for MIMO in downlink and uplink

The tried-and-tested R&S®SMU200A vector signal generator is noteworthy in that it can be equipped with two baseband generators, a 2 × 2 MIMO fading simulator and two RF paths (FIG 2). A generator equipped in this manner is ideal for HSPA+ MIMO tests. During a downlink test, the transmit signal of the first antenna of a base station can be generated in baseband A while the signal of the second antenna is generated in baseband B. The signals then run through the four paths of the MIMO fading simulator and finally reach the DUT via the two RF connectors. This means that a single signal generator can replace a complex test setup.

The generation of control messages in the HSDPA response channel HS-DPCCH during the uplink simulation has also been adapted to the requirements of HSPA+. Signal generators can now simulate mobile stations in MIMO mode, including the generation of messages regarding the desired number of transport blocks, for example. This makes it possible to verify a base station's correct response.

MIMO, 64QAM and CPC in the downlink — more flexible than the standard

64QAM is now available as a modulation method in the HSDPA data channels for generating downlink test signals. Similarly to the FRCs in the uplink, H-sets are defined in the 3GPP standard as reference configurations for downlink tests. The signal generators also generate these H-sets with complete, standard-conforming channel coding, scheduling and control information.

Besides the predefined H-sets 1 to 11 of the 3GPP standard, which already contain reference configurations for HSPA+ tests, the number of channels used, the scheduling, the modulation and all channel coding parameters can be changed as needed. Based on the familiar intuitive operating concept, these parameters are configured in a separate dialog (FIG 3). As a result, even tests that place greater demands on the DUT than the standardized tests — e.g. by using larger transport blocks — are possible. As seen in the figure, the parameters can be reset to one of the predefined H-sets at any time (by selecting *Predefined H-Set*).

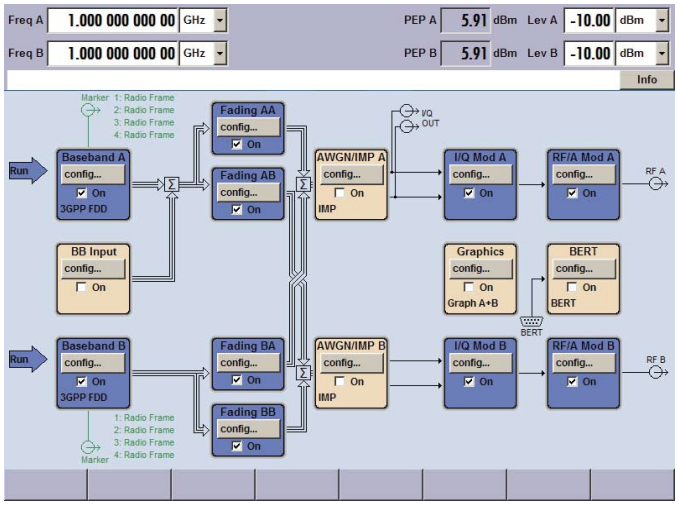

FIG 2 User interface of an R&S®SMU200A with two paths and 2 × 2-MIMO fading. The two paths (baseband A and baseband B) generate the signals of the two MIMO antennas.

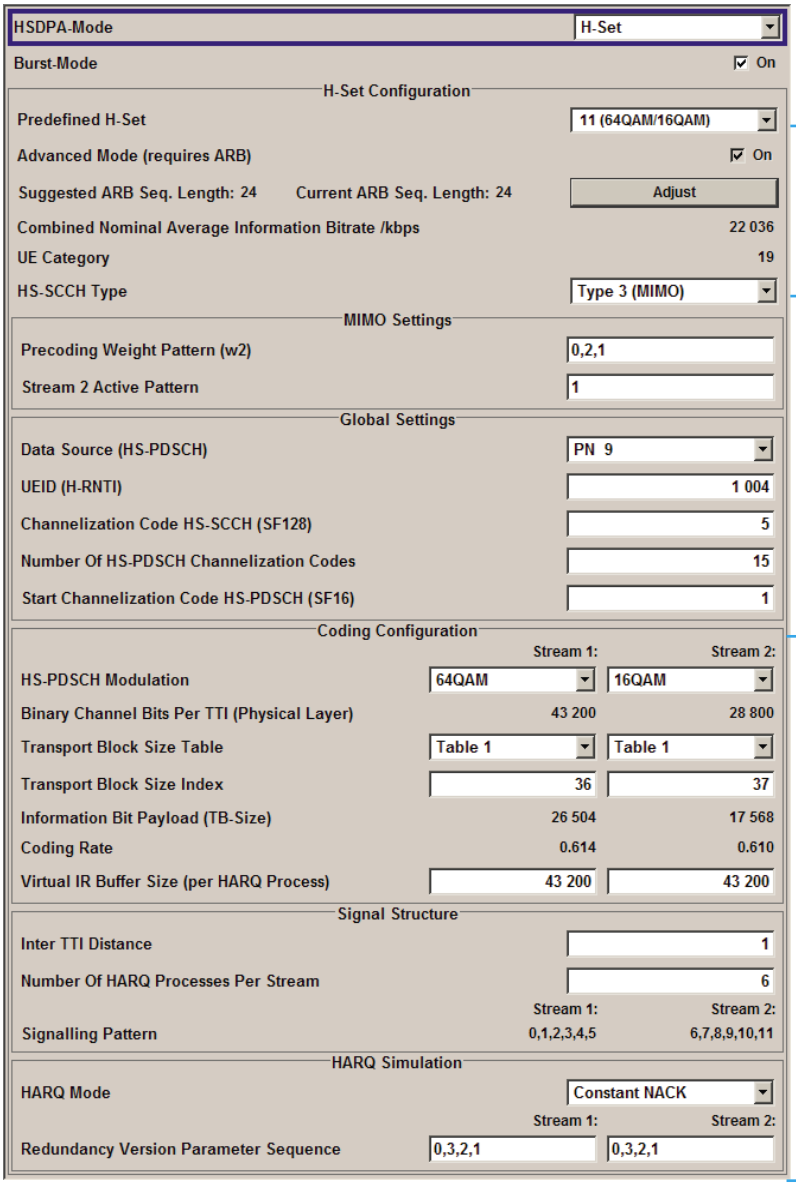

The H-sets defined in the 3GPP standard can conveniently be set using the preselection.

Since the HS-SCCH type can be selected as required, even signals for CPC (*HS-SCCH less operation*) or MIMO tests can be generated.

Modulation, channel coding and scheduling can be adapted individually to place higher demands on DUTs than defined in the standardized tests.

FIG 3 The menu for selecting and adapting H-sets.

The H-sets support all three HS-SCCH types defined in the 3GPP standard. Type 1 selects an operating mode without CPC and MIMO. Type 2 performs the coding of the control information and the scheduling in accordance with the CPC feature *HS-SCCH less operation*, and type 3 selects the MIMO mode. In this mode, the weighting factor for distributing the two MIMO streams to the antennas (*Precoding Weight Pattern*) and the number of simultaneously generated transport blocks (*Stream 2 Active Pattern*) can be varied over time. All three types allow a HARQ simulation in which individual packets are sent multiple times, whereby the bit-to-symbol mapping and the channel coding are modified for every packet repetition.

Signals for all categories

The uplink FRCs and downlink H-sets can therefore be used to test all new device categories (to UE category 20 in the downlink or to UE category 7 in the uplink), making the Rohde & Schwarz signal generators capable of generating HSPA+ signals.

Bertram Fesl