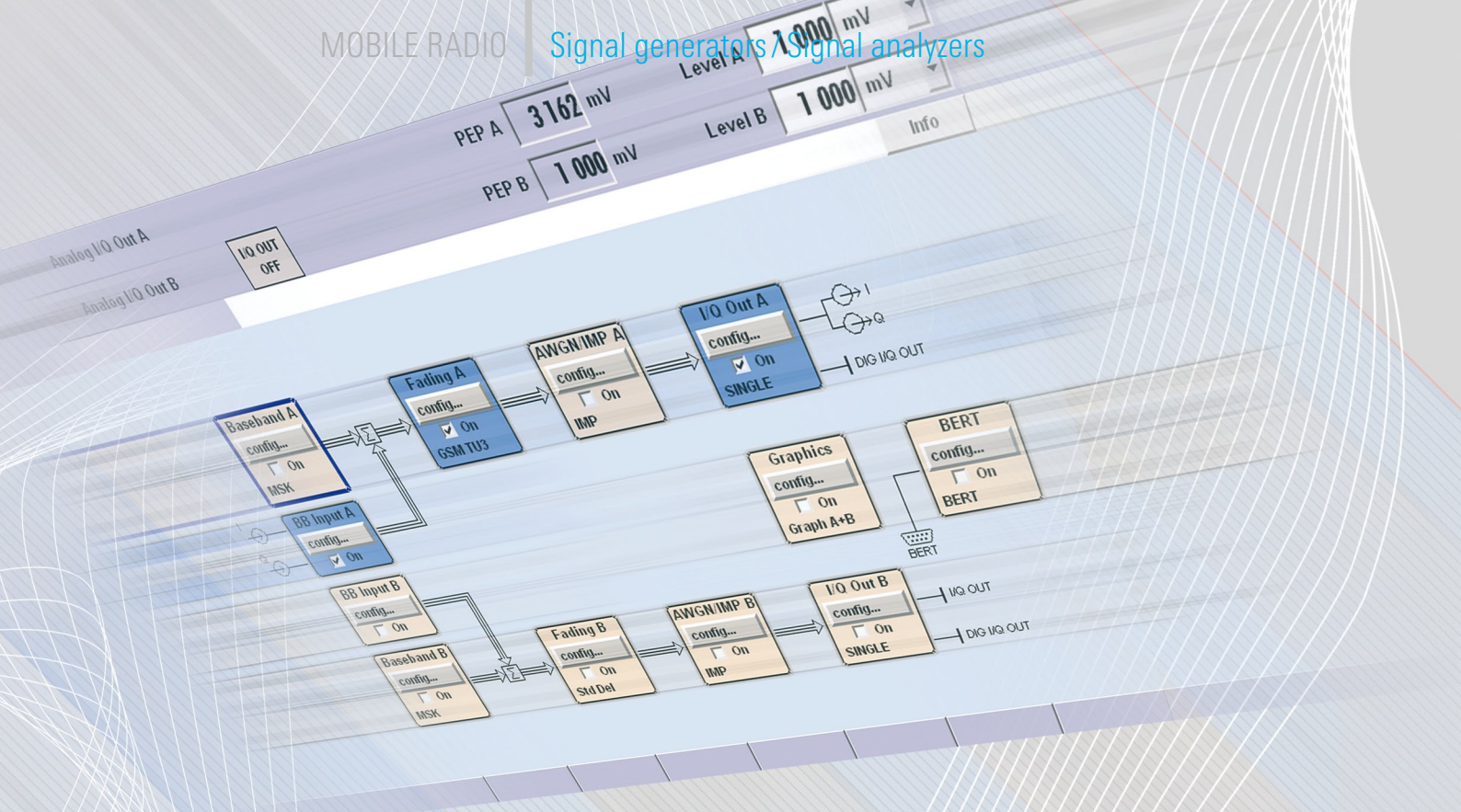
PEP A 3162 mV
PEP B 1 000 mV
Level A 1 000 mV
Level B 1 000 mV
Info
Analog I/Q Out A
Analog I/Q Out B
I/Q OUT OFF
Baseband A config... On MSK
BB Input A config... On
Fading A config... On GSM TU3
AWGN/IMP A config... On IMP
I/Q Out A config... On SINGLE
DIG I/Q OUT
Graphics config... On Graph A+B
BERT config... On BERT
BERT
BB Input B config... On
Baseband B config... On MSK
Fading B config... On Std Del
AWGN/IMP B config... On IMP
I/Q Out B config... On SINGLE
I/Q OUT
DIG I/Q OUT


ROHDE&SCHWARZ
AMU 200A · BASEBAND SIGNAL GENERATOR AND FADING SIMULATOR
1402.4090.02
ROHDE&SCHWARZ
UNIVERSAL RADIO COMMUNICATION TESTER · CMU 200
1100.0008.02
GSM900 Receiver Quality
100 Speech Frames

44866/11

Baseband tests reduce time to market

The new R&S®AMU 200 A baseband signal generator and fading simulator (FIG 1) offers unique capabilities for product development that reduce cost and time to market.

Tests at module level boost efficiency

Developers of mobile radiocommunications products are facing the challenge of having to launch their products in ever shorter times. Plus, solutions have to be found to cope with the growing cost pressure. A suitable way to solve these problems is to modularize device architectures. Dividing a communications device into independent, standardized functional units allows each unit to be developed – and also produced – separately, maximizing efficiency with respect to both cost and time. When taking this approach, it is vital to bear two factors in mind: First, each module must perform in a defined manner at the interfaces. This is particularly important where interoperability between products from different manufacturers is required. Second, to save cost and time in the overall design process, it is necessary to test the individual functional units of a system completely and under real conditions prior to integrating them into the system.

In mobile radiocommunications, the trend toward modularization is primarily indicated by the separate development of baseband and RF modules. With base stations as well as with mobile terminals, there is a growing need to develop – and also to test – these two types of modules separately. The new R&S®AMU 200 A baseband signal generator and fading simulator has been designed for precisely this application.

FIG 1 The R&S®AMU 200 A combines a dual-channel baseband signal generator and a fading simulator in a single unit – a unique solution available only from Rohde & Schwarz. The instrument not only generates baseband signals in line with a variety of digital standards, but can also be used as a pure fading simulator, e. g. in conjunction with the R&S®CMU 200 universal radio communication tester.

For a description of MIMO receiver tests with the R&S®AMU 200 A or the R&S®SMU 200 A, refer to the article on page 9.

Scalable for any requirement

The R&S®AMU 200 A includes two baseband generators and a dual-channel fading simulator in a 19" box occupying four height units. In addition, it features with its analog and digital inputs and outputs, which makes the R&S®AMU 200 A a highly versatile generator that performs all types of baseband tests. Whether you need a single-channel baseband generator, a pure baseband fader, or a dual-channel generator that offers fading capabilities and internal signal generation: The modular concept of the R&S®AMU 200 A allows the instrument to be tailored to your specific requirements. This scalability also means that you can easily upgrade the instrument to handle future measurement tasks.

Integrated dual-channel baseband signal generator

The R&S®AMU 200 A can be equipped with two internal baseband generators. The generators independently deliver signals in line with the following digital standards: GSM/EDGE, 3GPP FDD (including HSPA), CDMA2000®, TD-SCDMA, WLAN (IEEE 802.11a / b / g / n), WiMAX (IEEE 802.16-2005), DVB-H, GPS, and 3GPP Long Term Evolution (LTE), which is the next generation of the UMTS standard. The signals are in part even generated with channel coding and in realtime. Moreover, you can easily generate multicarrier signals, which may be made up of individual CW carriers or of signals modulated in line with various standards. Moreover, each generator has an arbitrary waveform memory of 16, 64, or 128 Msamples via which waveforms can be output that

are calculated by means of simulation programs such as R&S®WinIQSIM2™ or MATLAB®. Using the optional R&S®AMU-K6 pulse sequencer, you can generate pulse trains (e. g. for radar, DFS, or RFID), thus opening up further applications. The above functionalities combine to make the R&S®AMU 200 A a platform suitable for generating proprietary signals and also for simulating signals in accordance with new digital standards that are still at an early stage of development.

FIG 2 Dialog window for defining the R&S®AMU 200 A fading parameters including a graphical display.

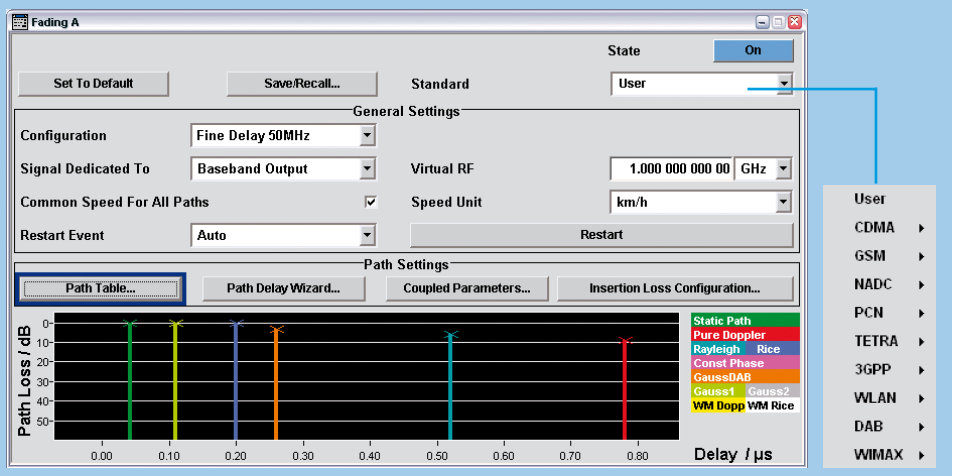

FIG 3 EVM measurement of a WiMAX OFDMA signal generated by the R&S®AMU 200 A.

IEEE 802.16e-2005 OFDMA

Frequency: 0 Hz		Signal Level Setting:	1 V	Ref. Level / Att:	1 V / 0 dB
N_{FFT}:	1024	Sweep Mode:	Continuous	Trigger Mode/Offset:	Free Run
Zone/Seg:	DL-PUSC, ID=A, Seg=0	Modulation:	ALL	Zone Offset/Length	1/28 Symbols

Result Summary of Analyzed Zone/Segment

No. of Zones/Segments	3					*
	Min	Mean	Limit	Max	Limit	Unit
BER Pilots	0.00	0.00	0.00	0.00	0.00	%
EVM Data and Pilots	- 58.01	- 58.00	- 30.00	- 57.98	- 30.00	dB
EVM Data	- 57.95	- 57.94	- 30.00	- 57.92	- 30.00	dB
EVM Pilots	- 58.39	- 58.35		- 58.32		dB
Unmod. Subcarrier Error	- 38.79	- 38.77		- 38.76		dB
IQ Offset	- 53.08	- 52.96	- 15.00	- 52.81	- 15.00	dB
Gain Imbalance	0.01	0.01		0.01		dB
Quadrature Error	0.007	0.007		0.007		°
Power DL Preamble	12.28	12.28		12.28		dBm
Power Data and Pilots	3.71	3.71		3.71		dBm
Power Data	3.24	3.24		3.24		dBm
Power Pilots	5.75	5.75		5.75		dBm

Dual-channel fading and AWGN simulation

The trend toward ever higher data rates is leading to increasingly complex digital mobile radio standards. Analyzing the performance of products under realistic transmission conditions is therefore becoming more and more important. The R&S®AMU 200 A is a cost-effective solution, as it can be equipped with up to two baseband fading simulators. In the single-channel mode, up to 40 fading paths are available at a bandwidth of 80 MHz and a path delay resolution of 10 ns. Current – and future – mobile radio standards normally use bandwidths narrower than 40 MHz. For bandwidths of maximally 50 MHz (30 MHz) and a maximum of 16 (24) paths, resolution as high as 0.01 ns is achieved. With dual-channel fading, the R&S®AMU 200 A can simulate up to 20 different propagation paths of a signal for each channel. The R&S®AMU 200 A offers predefined static and dynamic fading scenarios (e. g. for 3GPP FDD, WiMAX, GSM/EDGE, and CDMA2000®) for standard-conforming channel simulations. All fading parameters can also be configured manually (including fading statistics, delay, and correlations). The current configuration can be seen at a glance on the straightforward graphical user interface (FIG 2).

Versatile test capabilities

The R&S®AMU 200 A is a powerful signal source for performing tests at the baseband level including channel simulation. This allows baseband and RF modules commonly used in transmission to be developed separately from each other (FIG 5a).

Featuring excellent signal quality, the R&S®AMU 200 A is an ideal baseband signal source, e. g. for designing I/Q modulators or complete RF frontends

(FIG 5b). Its low EVM (FIG 3) and flat frequency response (FIG 4) ensure that the influence of the signal source on measurements is negligible. Equipped with differential I/Q outputs, the R&S®AMU 200 A also performs tests on differential modules.

By using the R&S®AMU 200 A in conjunction with a vector signal generator (e. g. the R&S®SMATE 200 A), which converts the I/Q signal to the RF, you can carry out receiver tests on RF modules (FIG 5c) or tests on complete devices under test (DUTs) (FIG 5d). For either type of test, the R&S®AMU 200 A generates the baseband signal and performs channel simulation including fading and AWGN generation. This does away with the need for an extra RF fader or an external noise source. The R&S®AMU 200 A can also be used for optimizing the receiver performance of baseband modules (FIG 5e).

Channel simulation at the baseband makes it possible to perform tests under realistic transmission conditions even at an early stage of development, often before the RF design is completed. It is thus easy to verify the performance of hardware prototypes, and to optimize baseband algorithms from the outset. All this helps to reduce time to market for new technologies.

The R&S®AMU 200 A can also be used as a pure baseband fader. For instance, signals from a radiocommunications tester can be fed to the R&S®AMU 200 A via its baseband inputs. The R&S®AMU 200 A fades the signals, superimposes AWGN, and outputs them again as baseband signals. The signals are either directly applied to the DUT, or upconverted to the RF by the radiocommunications tester.

FIG 4 Typical frequency response of the analog I/Q outputs of the R&S®AMU 200 A.

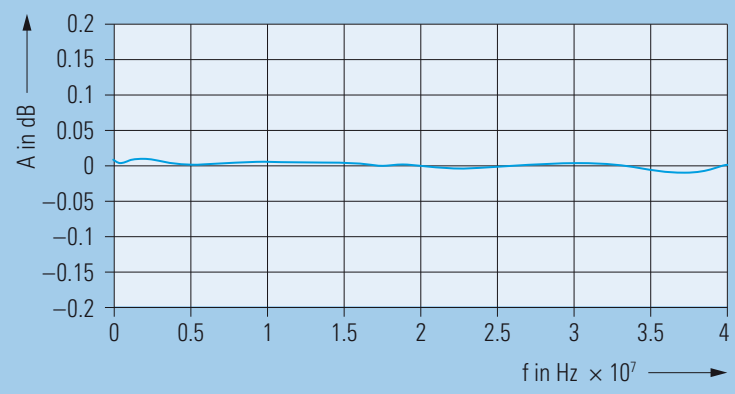

FIG 5 The R&S®AMU 200 A allows complex systems to be tested at module level. The integrated fading simulator provides realistic transmission conditions. Due to the instrument's dual-channel concept, TX and RX diversity as well as 2 × 2 MIMO scenarios can be simulated.

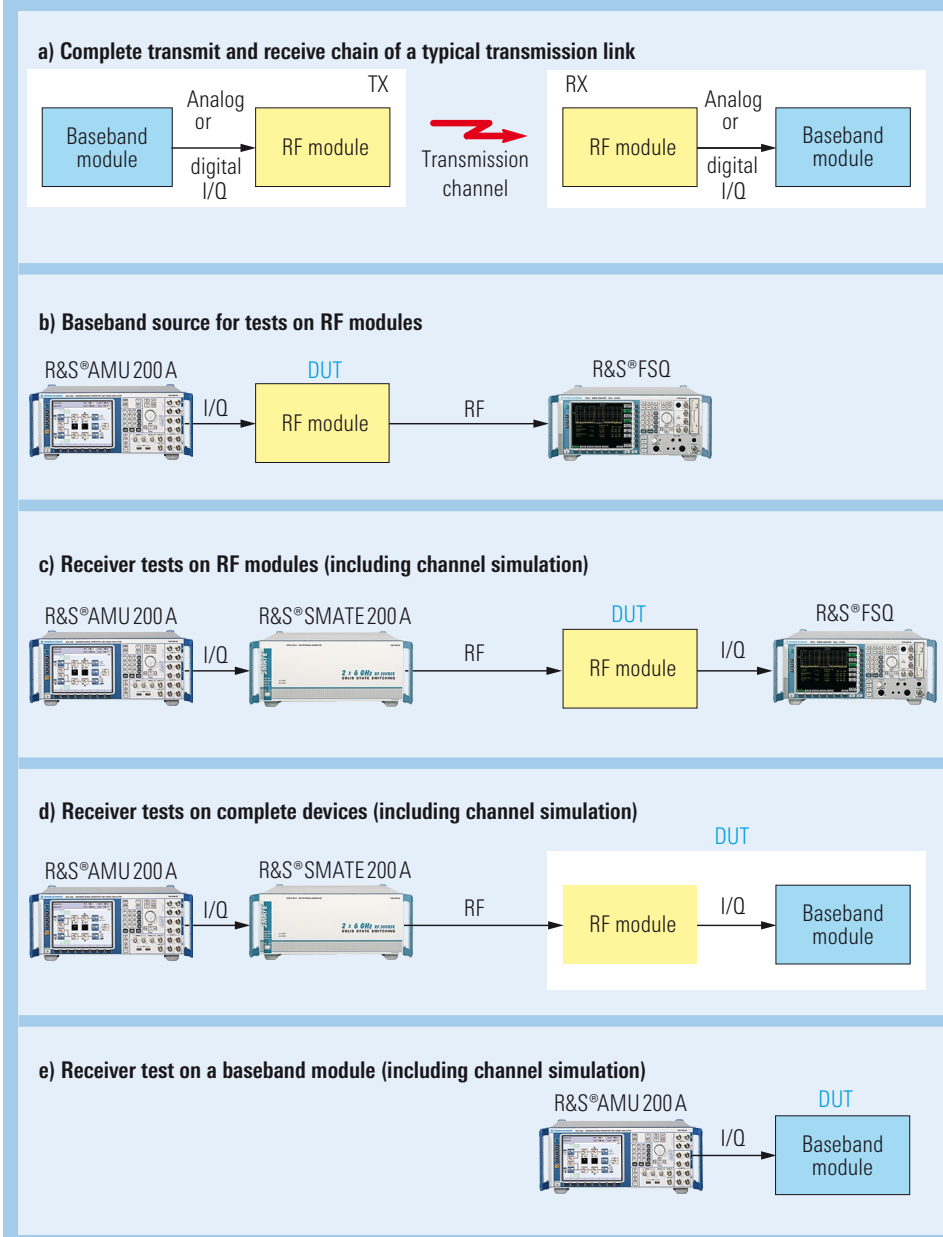

RX/TX diversity and MIMO

In addition to general tests on RF and baseband modules, the R&S®AMU 200 A is also ideal for diversity tests due to its dual-channel concept. Diversity tests usually require two antenna signals, which are both provided by the R&S®AMU 200 A. The instrument's baseband architecture allows the versatile generation of signal scenarios by the internal addition of signals including frequency and level offsets. Signals for TX and RX diversity tests can thus be generated solely by means of the R&S®AMU 200 A's internal signal generators (FIGs 6 and 7).

Using the R&S®AMU-K74 option, the R&S®AMU 200 A also simulates 2 × 2 MIMO scenarios. The option adds two more fading channels to the R&S®AMU 200 A to give a total of four, which allows the simulation of the four transmission paths between the two transmit and the two receive antennas of a 2 × 2 MIMO configuration. For more information, refer to page 9. By using the R&S®AMU 200 A in conjunction with the R&S®SMATE 200 A dual-channel vector signal generator, you can perform receiver tests covering two receive antennas (up to 2 × 6 GHz) even at the RF level.

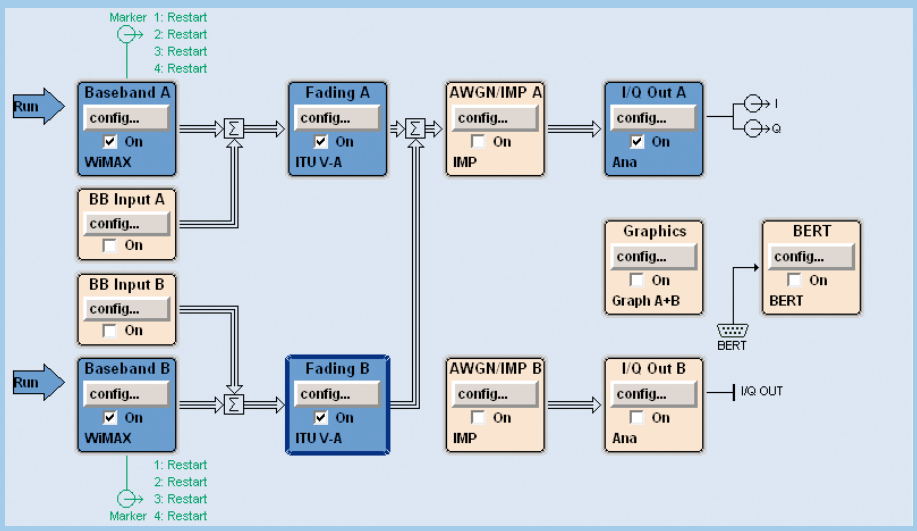

FIG 6 Configuration of the R&S®AMU 200 A for TX diversity tests: The two TX signals are subjected to different fading conditions, added together internally, and output as an RX antenna signal.

FIG 7 Configuration of the R&S®AMU 200 A for RX diversity tests: The TX signal is subjected to different fading conditions, and the resulting signals are output as two RX antenna signals.

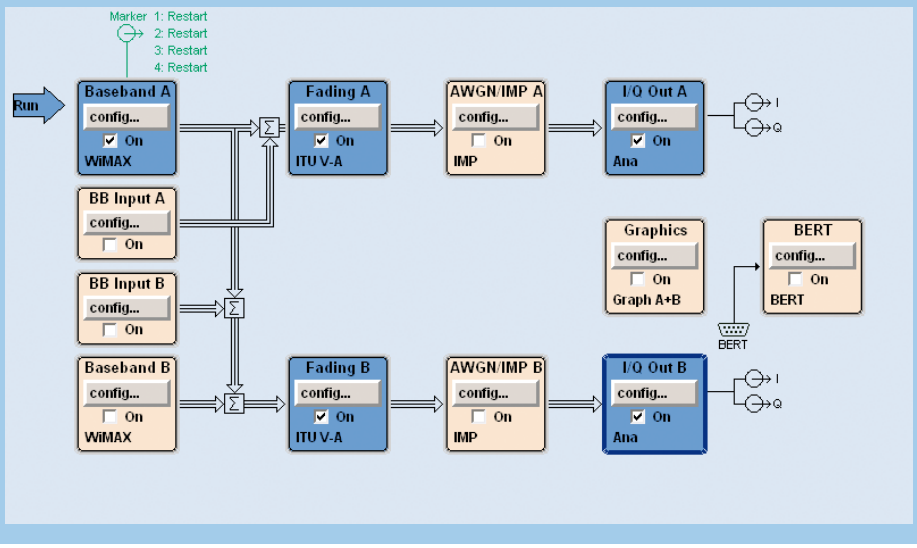

Summary

The R&S®AMU 200 A is a universal baseband source that combines the functionalities of a realtime I/Q source, an arbitrary waveform generator, and a channel simulator in a single box. The optional two-path functionality makes it easy to generate even complex signal scenarios. You can simulate interference, noise, multipath propagation, antenna diversity, as well as 2 × 2 MIMO scenarios, and determine their effect on a DUT reproducibly, with minimum effort, and with only one instrument.

These capabilities make the R&S®AMU 200 A an ideal tool for performing complex tests already at the baseband. The R&S®AMU 200 A makes it possible to detect and eliminate design errors at module level even at an early stage of development. This does away with costly and time-consuming redesign work at later stages in product development. The R&S®AMU 200 A can thus play a major role in getting your products to the market faster and at lower cost.

Simon Ache

More information and data sheet at www.rohde-schwarz.com (search term: AMU200A)