A new firmware module has been developed for the R&S ESPI (FIG 1) that further facilitates EMI emission analysis. The advantages of the new functions are demonstrated by means of conducted EMI on a PC power supply. An external DC power supply and a battery pack are available for network-independent measurements (see box on right).

Precompliance Test Receiver R&S ESPI

Measurement of conducted EMI when using a switching power supply

Successful multitalents

The precompliance Test Receivers R&S ESPI3 and R&S ESPI7 [*] were introduced in 2001 as multitalents and fulfilled all expectations. They not only handle standard spectrum analyzer applications and thus basic measurement tasks – they are also used to prepare for EMI certification in your own lab. The market has responded very positively to such versatility coupled with numerous intelligent functions in the medium price range.

An application example consisting of an EMI measurement using a PC switching power supply is presented here to highlight important integrated functions of the R&S ESPI models. These time-saving instruments considerably simplify everyday measurements without compromising the required measurement reproducibility. On the basis of these precompliance measurements and the results obtained, confirmation by standard-conformant final tests at an accredited test house will be strictly a formality.

Overview measurements save time and costs

The appropriate means of interference suppression is determined by performing EMC testing of conducted EMI. Adequate suppression of conducted EMI should always be ensured before interference fields, i.e. radiated EMI, are analyzed.

The switching power supply in a PC or laptop is the main source of interference. To ensure that the switching power supply has proper EMC, it is designed, for example, with lowpass filters consisting of series inductance and case capacitance. However, frequent improvements to circuit design or layout are very time-consuming and expensive. The R&S ESPI can drastically reduce this effort because it allows you to perform quick and easy overview measurements that can be used to record and evaluate the effects of precompliance interference suppression due to components, filters and shielding. Together with the V-Network R&S ESH3-Z5, initial overview measurements can be easily performed on the lab bench to determine critical frequencies. Ideal test conditions, however, call for the use of a screened room, especially with a view to unimpaired reproducibility of test results (FIG 2).

Limit values specified in European standard

The European EN 55022 standard for limit values for maximum permissible EMI applies to switching power supplies in laptops. There are two limit values with parallel run and 10 dB offset for conducted EMI evaluation using the quasi-peak (QP) detector and the average (AVG) detector. To make sure that the limit lines are not exceeded in production, an offset of –3 dB to –6 dB from the limit lines is advisable to compensate for the production tolerances of the switching power supplies. To be on the safe side, a larger offset from the limit values should be selected in the case of lab bench results (safety margin for setup and parameter scatter). A higher offset, i.e. lower EMI, is desirable, but requires increased suppression and consequently higher production costs and is therefore economically not viable.

FIG 1 The Test Receivers R&S ESPI combine the advantages of analyzers and conventional test receivers.

43665/12

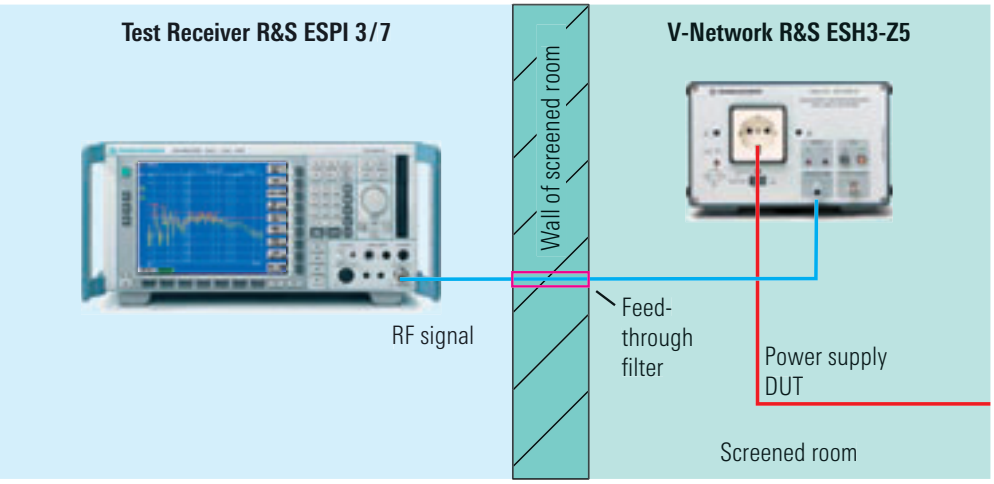

FIG 2 To perform interference-free reproducible measurements, a test setup with screened room is recommended.

Quick overview measurements during development

Overview measurements performed with the peak detector and the parallel average detector in the 150 kHz to 30 MHz frequency range produce fundamentals and harmonics. Suppression by connecting the source of interference to X capacitors, which is usually carried out in several steps, results in the attenuation of primarily the symmetrical interference in the low-frequency range. At higher frequencies, interference becomes increasingly asymmetrical. Y capacitors against ground (reference conductor) are used to attenuate asymmetrical interference up to several megahertz. Mismatches of a symmetrical low-impedance interference source can be improved by inserting series inductance (current-compensated toroidal core inductor). Unsuitable setups on the lab bench with open printed boards may cause coupling problems at high frequencies that will diminish once the boards are mounted in metal enclosures and have optimum ground connection.

Since the measurement is performed initially only with the setting to phase L1 or to phase N of the artificial mains network, it is necessary to determine whether the amplitudes of the other phase are higher. In some cases, the test sequences have to be repeated several times. The artificial mains network, which is controlled via the TTL level on the USER PORT of the test receiver, is set in the PRESCAN PHASES submenu of the RECEIVER-FINAL MEAS menu. Analogously, the phases for the final test must be set under FINAL PHASES.

New DC supply and battery options for the R&S ESPI and R&S FSP families

With the Battery Pack R&S FSP-B31 and the Spare Battery Pack R&S FSP-B32, the optional DC Power Supply R&S FSP-B30 (FIG below) makes network-independent measurements possible. The input voltage range is 10 V to 28 V DC, thus allowing operation by connection to a standard car battery. The typical operating time of the 3 GHz models in battery mode is approx. 2 h. The options can be retrofitted; the DC Power Supply R&S FSP-B30 can be attached to all R&S FSP and R&S ESPI units, whereas options R&S FSP-B31/-B32 can only be used with units that are equipped with the robust R&S FSP-B1 option, including shock protection and carrying strap. Together, both options add 4.3 kg to the normal receiver weight of approx. 11 kg. Options R&S FSP-B30 / -B31 are charged from a separate power supply. The built-in load controller protects against overload.

Condensed data of R&S FSP-B30

Input voltage range	10 V to 28 V DC
Current drain R&S FSP3 / ESPI3	typ. 6 A
R&S FSP30	typ. 8 A
Operating temperature range	0 °C to 50 °C
Weight	0.6 kg

Condensed data of R&S FSP-31

Output voltage	13.2 V
Capacitance	200 Wh
Charging time	approx. 5 h
Operating time	approx. 2 h
Operating temperature range	0 °C to 50 °C
Weight	3.7 kg

During phase switchover, all artificial mains networks can exhibit voltage peaks that may damage the RF input section. To protect the input against signal levels that are too high, use pulse-resistant 10 dB or 20 dB attenuator pads or the Pulse Limiter R&S ESH3-Z2.

The excellent technical features of the R&S ESPI, such as wide dynamic range, high sensitivity and test speed, three-fold detector and a variety of resolution bandwidths (10 Hz to 10 MHz RBW and 200 Hz, 9 kHz, 120 kHz, 1 MHz CISPR bandwidths), are beneficial even during the overview measurements. The amplitude measurement error specified at <±1.5 dB also remains below the ±2 dB value stipulated in the EMC basic standard CISPR16-1. The Preselector/Preamplifier R&S ESPI-B2 improves the protection against overload caused by unwanted broadband signals; this and improved sensitivity by switching in the preamplifier, if necessary, produce a higher S/N ratio and thus increased measurement accuracy. Compared to other precompliance test receivers in this price range, the R&S ESPI with its outstanding features is clearly the best of the field (see also EMC-relevant features in [*]).

Data reduction shortens measurement time

The critical measurement values obtained in the quick overview measurement (precompliance measurement) have to be double-checked by using standard detectors during an appropriately long test period; only then can they be compared to the limit lines of the EN 55022 standard. Since the precompliance measurement also yields a lot of measurement results that are far below the limit values and therefore are not likely to exceed them even during long final measurements, the user can draw up a shorter frequency list by means of data reduction. The new PEAK SEARCH function can be used for this purpose; it utilizes the value specified for No. of PEAKS and/or the value for MARGIN (safety margin from limit lines) (FIG 3).

Since the trace may produce unwanted scatter plots, equidistant subranges (SUBRANGES) can be used to define a different constellation. This ensures that only one value per subrange and trace is listed for the final tests. In this example, we recommend that 25 points and a limit value of –6 dB be entered in a first attempt. The 25 highest peaks of trace 1, measured with the peak detector, and the 25 highest level values of trace 2, weighted by means of the average detector of the precompliance test files, will then be listed in the prescan result list (FIG 4).

The table can then be modified as required. For this purpose, the MARKER

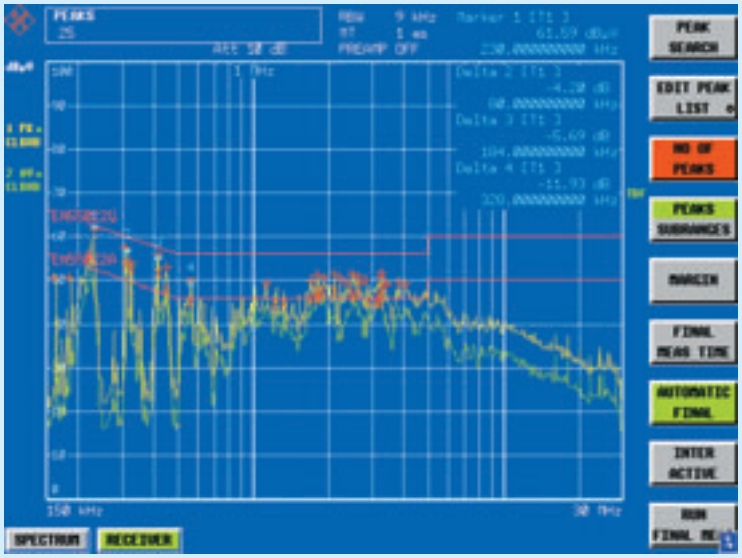

FIG 3
Peak search with 25 peak values.

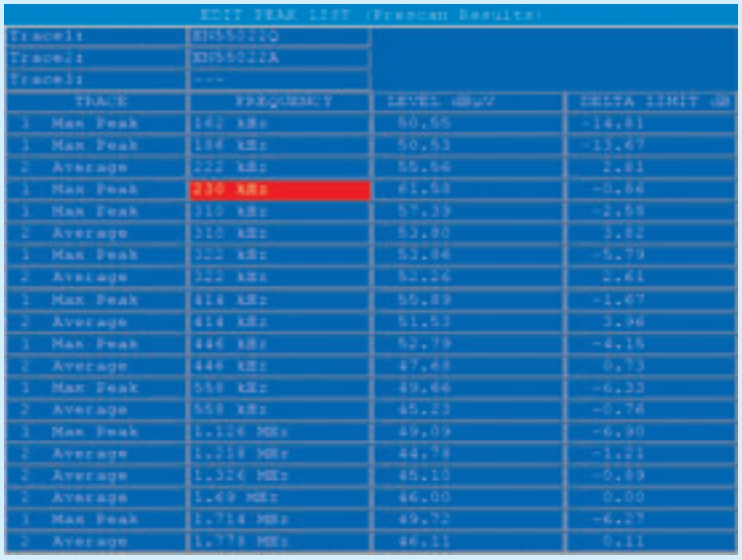

FIG 4
Table with prescan results.

menu (MKR) contains several functions that enable straightforward operation, aided by the rotary knob (FIG 5). MARKER to PEAK, NEXT PEAK, SEARCH NEXT LEFT/RIGHT, ADD to PEAKLIST, to name just a few useful functions, ensure maximum efficiency when compiling the frequency list for the final tests.

TUNE to MARKER defines the marker frequency as the receive frequency and can be displayed as a single measurement with a maximum of three detectors simultaneously (FIG 6). This coupling remains active with MARKER TRACK. The AM or FM demodulator can be applied simultaneously for acoustic EMI identification. If MARKER TRACE is used, the active MARKER is also active on other trace contents it was assigned to.

It is precisely this mix of automatic data reduction with regard to limit lines, safety margin (MARGIN) and manual post-processing that makes working with the R&S ESPI so effective. In addition, the user can decide during the SCAN precompliance test to interrupt the measurement at specific frequencies (HOLD SCAN) and to determine in each case whether the frequency in question is critical. Moreover, the zoomed split-screen display in the upper part of the screen allows higher resolution with completely independent parameters, e.g. for measurement bandwidth, span and RF attenuation. The measurement can either be continued at the point where it was interrupted (CONTINUE AT HOLD) or it can be set to resume at a previous lower frequency by overwriting the frequencies that are repeatedly measured (CONTINUE AT REC FREQ).

The variety of functions offered meets almost every requirement, because the user can choose from any analysis option conceivable. To provide a straightforward overview, the QP values are marked by + and the AVG values by x (FIG 5) in the graphical display.

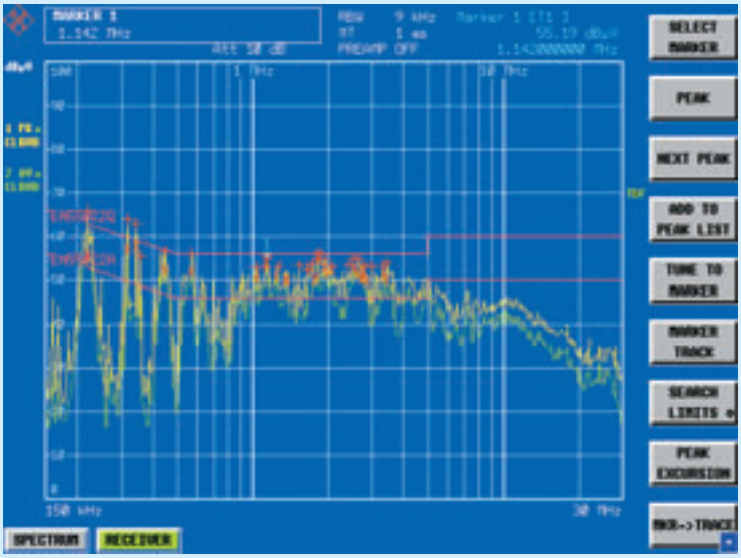

FIG 5
Marker functions help the user to modify the frequency table and to mark the QP and AVG values in the diagram.

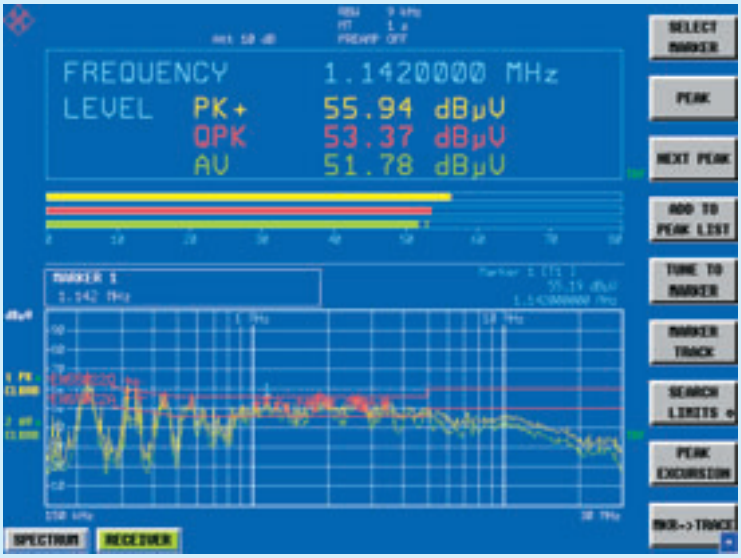

FIG 6
Split-screen display with marker-coupled threefold detector.

Final measurement, automatic or manual

The final analysis of the measurement results by means of the compiled table (FIG 7) is started by merely selecting RUN FINAL MEAS from the submenu for the receiver settings. In the AUTOMATIC setting, the R&S ESPI remeasures all listed frequencies from trace 1 or trace 2 using the QP or AVG detector in all four settings of the artificial mains network and at a measurement time of 1 s. With approx. 50 test points with four settings each, the measurements take approx. 200 s to 220 s. This is tremendously time-saving compared to measurements without data reduction, which would require from four to six hours depending on the step width of the predefined scan settings.

EDIT PEAK LIST (Final Measurement Results)

Trace1:	EN55022Q
Trace2:	EN55022A
Trace3:	---

TRACE	FREQUENCY	LEVEL dBµV	DELTA LIMIT dB
1 Quasi Peak	162 kHz	42.17 L1 f1	-23.18
1 Quasi Peak	186 kHz	44.88 L1 f1	-19.33
2 Average	222 kHz	54.32 L1 gnd	1.58
1 Quasi Peak	230 kHz	57.33 L1 f1	-5.11
1 Quasi Peak	310 kHz	56.08 L1 gnd	-3.88
2 Average	310 kHz	47.58 N gnd	-2.39
1 Quasi Peak	322 kHz	55.73 N f1	-3.92
2 Average	322 kHz	48.30 N gnd	-1.35
1 Quasi Peak	414 kHz	55.19 L1 f1	-2.37
2 Average	414 kHz	48.90 N gnd	1.33
1 Quasi Peak	446 kHz	53.29 L1 gnd	-3.65
2 Average	446 kHz	48.66 N gnd	1.71
1 Quasi Peak	558 kHz	47.58 N gnd	-8.41
2 Average	558 kHz	45.10 N f1	-0.89
1 Quasi Peak	1.126 MHz	49.60 L1 f1	-6.39
2 Average	1.218 MHz	48.07 N gnd	2.07
2 Average	1.326 MHz	40.45 L1 f1	-5.54
2 Average	1.69 MHz	47.39 L1 gnd	1.39
1 Quasi Peak	1.714 MHz	48.37 L1 f1	-7.62
2 Average	1.778 MHz	45.79 N f1	-0.20

FIG 7 Table with the results of the final measurement showing phase and protective earth settings.

The interactive mode is used for cases where automatic final measurements are not advisable. The frequency is set on the receiver, where it is selected from the list along with all associated settings such as bandwidth, measurement time, preamplification and RF attenuation. The marker is also set to this frequency in the scan diagram. The receiver parameters can still be varied. If the maximum value (user-defined) is displayed and MEASURE is selected, the measurement is final-weighted and the values entered into FINAL FREQ. LIST. This process is repeated for all frequencies to be set until the complete list has been processed.

You can, of course, print all scan, transducer, limit lines, test result tables and graphs that are relevant for the measurement and documentation and store them in file format on either hard disk or diskette. You can also transfer them to a separate PC via the LAN Ethernet (R&S FSP-B16) option. To export measurement results, ASCII formatting can be defined using either a decimal point or a comma as a separator.

The EMI software packages R&S ES-K1 and R&S EMC32 offer further documentation options. With the R&S EMC32, for example, documents can also be generated in HTML, RTF or PDF format.

Volker Janssen

More information and data sheet at www.rohde-schwarz.com (search term: ESPI)

Data sheet R&S ESPI

REFERENCES

[*] Precompliance Test Receiver R&S ESPI: Multitalent in the development lab. News from Rohde & Schwarz (2001) No. 171, pp 33–38