I/Q Modulation Generator AMIQ – more applications through differential I/Q outputs

Photo 43 213

FIG 1 Making four out of two: new option doubles number of generator outputs for inverted I/Q signals and considerably extends AMIQ application range

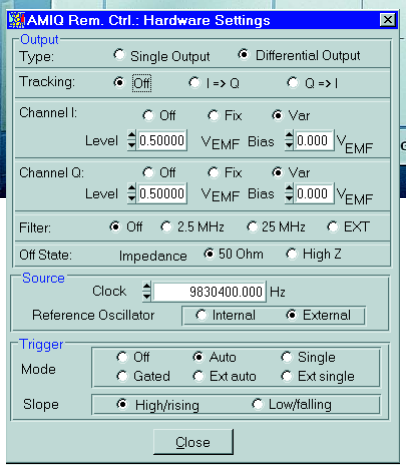

FIG 2 AMIQ menu of WinIQSIM: with new differential I/Q output option, menu item "Differential Output" with various setting possibilities is available

AMIQ becomes even more versatile

Rohde & Schwarz developed I/Q Modulation Generator AMIQ (FIG 1) for convenient generation of baseband signals [1] for complex I/Q modulation, which is increasingly used in modern communication. AMIQ is operated either from Vector Signal Generator SMIQ [2] or Software WinIQSIM [3] supplied with it.

In addition to uses at the RF, more and more applications are being performed in the baseband or at IF level, where RF carrier modulation with SMIQ is not required.

Thanks to its excellent characteristics, AMIQ equipped with the differential I/Q output option can be used for **numerous new applications**. The option adds two outputs to the front panel of the generator, where the inverted $\overline{I}$ and $\overline{Q}$ signals are available.

Some DUTs like I/Q modulators have balanced differential amplifiers at their inputs to reduce or avoid the coupling in of unwanted signals or to compensate the offset drift of their input transistors. AMIQ with its differential outputs is ideal for examining DUTs of this kind because it provides **highly accurate and highly stable I/Q signals and DC bias voltages** for setting operating points.

New features

- A **DC (bias) voltage** between –2.5 V and +2.5 V can be superimposed on the modulation signal. This bias affects both the I and $\overline{I}$ (or Q and $\overline{Q}$) signals but can be set separately for the I and Q channels.
- **Output impedance selectable** in the OFF state:
  50 Ω: for experimental purposes the modulation signal can be switched off without changing the operating point of the DUT set via the bias voltages. The bias voltage is maintained at the output.
  HIGH Z: the output is high-impedance, the bias voltage is switched off.
- The output level of the basic unit is always referred to a 50 Ω termination to ground. With the new option, the output level is the **open-circuit voltage between the non-inverting and the inverting output**, since most DUTs have a high input impedance. The level at the DUT can easily be calculated from the open-circuit voltage and the input impedance. Since the impedance of an active AMIQ output is al-

ways 50 Ω, the voltage division across high-impedance loads (>5 kΩ) is negligible in most cases (error <1%).

Operation: convenient as usual

When **AMIQ is controlled via WinIQSIM**, the AMIQ operating menu is displayed (FIG 2). With "Single Output" activated, the generator acts like the basic unit without the option. The modulation signals are looped through to the non-inverting outputs and the inverting outputs are disabled. This is a useful feature when only unbalanced signals are needed and very high performance is called for, eg the best values for output offset.

Clicking on "Differential Output" makes all features of the option available. Not only modulation signals are applied to all four outputs, a DC voltage can also be superimposed on these signals (see example in blue box).

Burkhard Küfner

REFERENCES

[1] Kernchen, W.; Tiepermann, K.-D.: I/Q Modulation Generator AMIQ – Convenient generation of complex I/Q signals. News from Rohde & Schwarz (1998) No. 159, pp 10–12

[2] Klier, J.: Signal Generator SMIQ – High-quality digital modulation up to 3.3 GHz. News from Rohde & Schwarz (1997) No. 154, pp 4–6

[3] Pauly, A.; Holzhammer, J.: I/Q Simulation Software WinIQSIM – New approaches in calculating complex I/Q signals. News from Rohde & Schwarz (1998) No. 159, pp 13–15

Condensed data of AMIQ-B2

Outputs	I, $\overline{I}$, Q and $\overline{Q}$
Bias voltage	–2.5 V to +2.5 V (suitable for ECL)
Resolution	<1.5 mV
Difference between I(Q) and $\overline{I}$($\overline{Q}$)	<0.5 % + 1.5 mV
Output voltage	
Fixed mode	2 V
DC residual offset	<1 mV
DC fine variation	typ. ±120 mV
Resolution	120 µV
Variable mode	0 mV to 4 V
DC fine variation	typ. ±280 mV
Resolution	280 µV
Maximum output voltage	<2.5 V (to ground)

Reader service card 162/07

FIG 3
Driving modulator chip

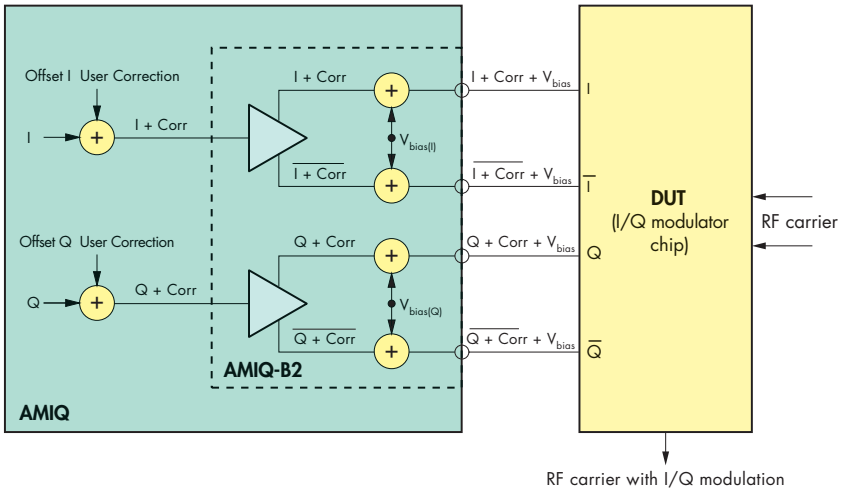

Example: Driving an I/Q modulator chip

The modulation input of a typical chip comprises a balanced semiconductor circuit with constant current source, which normally has a high input impedance so that it can also be driven by high-impedance generators. Differences in the base-emitter paths cause a DC offset, which produces inadmissibly high LO amplitude at the output and has to be eliminated for optimum LO suppression.

Using AMIQ with the new option this can be achieved as follows (FIG 3): AMIQ generates the desired modulation signals with frequencies up to 25 MHz. The operating point of the chip is adjusted via the bias voltage. By superimposing the bias voltage with an offset voltage set in the basic unit (under "User Correction"), the selected bias voltage can be influenced and the offset differences eliminated.

The circuit of the option causes the originally set bias voltage of the respective channel (I or Q) to diverge. The additional DC voltage applied via "User Correction" is looped through unaltered to the non-inverting output. This increases the set bias voltage by 0.24 mV for example. In contrast, the offset at the inverting output reduces the set bias by 0.24 mV. The difference between the I and $\overline{I}$ or Q and $\overline{Q}$ signal is therefore twice as great as the "User Correction" set on the basic unit (ie 0.48 mV). This balancing of bias voltages corrects unsymmetries and minimizes the residual RF carrier at the output of the DUT.