R&S®TS-PSU
Power Supply/Load Module
User Manual

1504456012
Version 07

ROHDE&SCHWARZ
Make ideas real

This manual describes the following R&S®TSVP module:

- R&S®TS-PSU

Muehldorfstr. 15, 81671 Muenchen, Germany
Phone: +49 89 41 29 - 0
Email: info@rohde-schwarz.com
Internet: www.rohde-schwarz.com

1504.4560.12 | Version 07 | R&S®TS-PSU

The following abbreviations are used throughout this manual: R&S®TS-PSU is abbreviated as R&S TS-PSU.

Contents

1 Safety information (multilingual)

This option or accessory is designed for a specific Rohde & Schwarz product. Multilingual safety information is delivered with the product. Follow the provided installation instructions.

Esta opción o este accesorio están diseñados para un producto Rohde & Schwarz concreto. El producto va acompañado de información de seguridad en varios idiomas. Siga las instrucciones de instalación puestas a disposición.

Diese Option oder dieses Zubehör ist für ein bestimmtes Rohde & Schwarz Produkt vorgesehen. Mit dem Produkt werden mehrsprachige Sicherheitsinformationen geliefert. Befolgen Sie die mitgelieferten Installationsanweisungen.

Cette option ou cet accessoire est conçu pour un produit Rohde & Schwarz spécifique. Des informations de sécurité multilingues sont fournies avec le produit. Suivez les instructions d'installation fournies.

Questa funzione opzionale o accessoria è progettata per un prodotto Rohde & Schwarz specifico. Con il prodotto sono fornite informazioni sulla sicurezza in formato multilingue. Seguire le istruzioni di installazione allegate.

Esta(e) opção ou acessório foi concebida(o) para um produto específico da Rohde & Schwarz. Serão fornecidas informações de segurança multilingues com o produto. Siga as instruções de instalação fornecidas.

Αυτή η προαιρετική επιλογή ή εξάρτημα έχει σχεδιαστεί για συγκεκριμένο προϊόν Rohde & Schwarz. Μαζί με το προϊόν παρέχονται πληροφορίες ασφαλείας σε πολλές γλώσσες. Ακολουθήστε τις παρεχόμενες οδηγίες εγκατάστασης.

Din l-għażla jew aċċessorju huma mfassla għal prodott Rohde & Schwarz speċifiku. L-informazzjoni multilingwi dwar is-sikurezza hija pprovduta mal-prodott. Segwi l-istruzzjonijiet ipprovduti għall-installazzjoni.

Deze optie of dit accessoire is ontwikkeld voor een specifiek product van Rohde & Schwarz. Het product wordt geleverd met veiligheidsinformatie in meerdere talen. Volg de meegeleverde installatie-instructies.

Denne mulighed eller tilbehørsdel er designet til et specifikt Rohde & Schwarz produkt. En flersproget sikkerhedsanvisning leveres sammen med produktet. Følg de medfølgende installationsanvisninger.

Detta tillval eller tillbehör är avsett för en särskild produkt från Rohde & Schwarz. Säkerhetsinformation på flera språk medföljer produkten. Följ de medföljande installationsanvisningarna.

Tämä vaihtoehto tai lisävaruste on suunniteltu tietylle Rohde & Schwarz -yrityksen tuotteelle. Tuotteen mukana on toimitettu monikieliset turvallisuusohjeet. Noudata annettuja asennusohjeita.

Dette alternativet eller ekstrautstyret er utformet for et spesifikt Rohde & Schwarz produkt. Flerspråklig sikkerhetsinformasjon leveres med produktet. Overhold installasjonsveiledningen som følger med.

See valik või lisaseade on mõeldud konkreetsele Rohde & Schwarz tootele. Tootega on kaasas mitmekeelne ohutusteave. Järgige kaasasolevaid paigaldusjuhiseid.

Šī opcija vai piederums ir izstrādāts īpaši Rohde & Schwarz produktam. Produktam pievienota drošības informācija vairākās valodās. Ievērojiet sniegtos uzstādīšanas norādījumus.

Ši parinktis ar priedas skirti konkrečiam Rohde & Schwarz gaminiui. Su gaminiu pateikiama saugos informacijos keliomis kalbomis. Laikykitės pateikiamų montavimo nurodymų.

Þessi auka- eða fylgibúnaður er hannaður fyrir tiltekna Rohde & Schwarz vöru. Öryggisupplýsingar á mörgum tungumálum fylgja með vörunni. Fylgið meðfylgjandi uppsetningarleiðbeiningum.

Tá an rogha nó an oiriúint seo ceaptha le haghaidh táirge Rohde & Schwarz sonrach. Cuirtear eolas sábháilteachta ilteangach ar fáil leis an táirge. Lean na treoracha suiteála a thugtar.

Эта опция или принадлежность предназначена для конкретного продукта Rohde & Schwarz. В комплект поставки продукта входят инструкции по технике безопасности на нескольких языках. Соблюдайте прилагаемые инструкции по установке.

Ця опція або приладдя призначені для конкретного виробу Rohde & Schwarz. Інструкції з техніки безпеки кількома мовами постачаються разом із виробом. Дотримуйтеся наданих інструкцій зі встановлення.

Ta opcja lub akcesorium jest przeznaczone do określonego produktu Rohde & Schwarz. Dostarczany produkt zawiera informacje w wielu językach dotyczące bezpieczeństwa. Należy postępować zgodnie z dostarczonymi instrukcjami instalacji.

Tato varianta nebo příslušenství je určeno pro konkrétní produkt Rohde & Schwarz. S produktem jsou dodávány vícejazyčné bezpečnostní informace. Řiďte se přiloženými pokyny k instalaci.

Táto verzia alebo príslušenstvo je navrhnutá pre špecifický výrobok Rohde & Schwarz. S výrobkom sa dodávajú viacjazyčné bezpečnostné pokyny. Riaďte sa dodanými pokynmi na inštaláciu.

Ta možnost ali dodatek je zasnovan za določen izdelek podjetja Rohde & Schwarz. Izdelku so priložena varnostna navodila v več jezikih. Upoštevajte priložena navodila za namestitev.

Ezt a beállítást vagy tartozékot egy adott Rohde & Schwarz termékhez tervezték. A termékhez többnyelvű biztonsági információt mellékelünk. Kövesse a mellékelt szerelési utasításokat.

Тази опция или аксесоар са проектирани за специфичен продукт на Rohde & Schwarz. Многоезикова информация за безопасност се доставя с продукта. Следвайте предоставените инструкции за монтаж.

Ova opcija ili oprema namijenjena je za određeni proizvod tvrtke Rohde & Schwarz. Uz proizvod su dostavljene sigurnosne napomene na više jezika. Pratite isporučene upute za ugradnju.

Ova opcija ili pribor je dizajniran za određeni Rohde & Schwarz proizvod. Proizvodu su priložene sigurnosne informacije na više jezika. Slijedite priložena uputstva za instalaciju.

Ova opcija ili dodatni pribor je projektovan za određeni Rohde & Schwarz proizvod. Bezbednosne informacije na više jezika se isporučuju uz proizvod. Sledite dostavljena uputstva za instalaciju.

Această opțiune sau acest accesoriu a fost conceput pentru un produs specific Rohde & Schwarz. Informațiile multilingve privind siguranța sunt livrate împreună cu produsul. Urmați instrucțiunile de instalare furnizate.

Ky opsion ose aksesor është krijuar për një produkt specifik Rohde & Schwarz. Bashkë me produktin jepen edhe informacionet e sigurisë në shumë gjuhë. Ndiqni udhëzimet e dhëna të instalimit.

Оваа опција или додаток се наменети за одреден производ на Rohde & Schwarz. Со производот се испорачани повеќејазични безбедносни упатства. Следете ги дадените упатства за инсталација.

Bu opsiyon veya aksesuar, belirli bir Rohde & Schwarz ürünü için tasarlanmıştır. Çok dilli güvenlik uyarıları ürünle birlikte teslim edilir. Size sağlanan kurulum talimatlarına uyun.

אפשרות זו או האביזר מיועדים למוצר ספציפי של Rohde & Schwarz. מידע רב-לשוני בנושא בטיחות מצורף למוצר. יש לפעול בהתאם להנחיות ההתקנה המצורפות.

تم تصميم هذا الخيار أو الملحق لمنتج معين من منتجات Rohde & Schwarz. يتم تزويد معلومات السلامة متعددة اللغات مع المنتج. اتبع تعليمات التركيب الموضحة.

این قابلیت یا وسیله جانبی منحصراً برای محصول به خصوص Rohde & Schwarz طراحی شده است. اطلاعات ایمنی چندزبانه همراه این دستگاه ارائه شده است. دستورالعمل‌های نصب ارائه شده را دنبال کنید.

اس اختیار یا حصے کو مخصوص Rohde & Schwarz پروڈکٹ کے لئے تیار کیا گیا ہے۔ پروڈکٹ کے ساتھ کثیر السانی زبانوں میں تحفظ کی معلومات فراہم کی جاتی ہیں۔ فراہم کردہ تنصیب کی ہدایات پر عمل کریں۔

Şu opsiýa ýa-da esbap Rohde & Schwarz anyk önüm üçin niýetlenilen. Dürli dildäki howpsuzlyk barada maglumat önüm bilen bile üpjün edilýär. Üpjün edilen gurnama ugrukdyrmalaryny ýerine ýetiriň.

इस विकल्प या एक्सेसरी को एक विशेष Rohde & Schwarz उत्पाद के लिए डिज़ाइन किया गया है. उत्पाद के साथ बहुभाषी सुरक्षा जानकारी दी जाती है. प्रदान किए गए इंस्टालेशन अनुदेशों का पालन करें.

本选件或附件专门设计用于特定的 Rohde & Schwarz 产品。产品随附多种语言版本的安全资讯。谨遵文件中的安装说明。

本オプションアクセサリは、特定の Rohde & Schwarz 製品向けに設計されています。多言語で記載された安全情報が製品に付属します。付属のインストール手順に従ってください。

이 옵션 또는 액세서리는 특정 Rohde & Schwarz 제품용으로 설계되었습니다. 제품과 함께 다국어로 작성된 안전 정보가 제공됩니다. 함께 제공된 설치 지침을 따르십시오.

本選配或配件專門設計用於特定的 Rohde & Schwarz 產品。產品隨附多種語言版本的安全資訊。遵守文件中的安裝說明。

Tùy chọn hoặc phụ kiện này dành riêng cho một sản phẩm Rohde & Schwarz cụ thể. Thông tin an toàn đa ngôn ngữ được cung cấp kèm theo sản phẩm. Thực hiện theo hướng dẫn lắp đặt kèm theo.

ตัวเลือกหรืออุปกรณ์เสริมนี้ออกแบบมาสำหรับผลิตภัณฑ์ Rohde & Schwarz โดยเฉพาะ โดยจะมีการจัดส่งข้อมูลด้านความปลอดภัยหลายภาษามาให้พร้อมกับผลิตภัณฑ์ ปฏิบัติตามคำแนะนำในการติดตั้งที่ให้ไว้

Pilihan atau aksesori ini direka bentuk untuk produk Rohde & Schwarz yang tertentu. Maklumat keselamatan berbilang bahasa disertakan bersama produk. Ikut arahan pemasangan yang diberikan.

Opsi atau aksesori ini dirancang untuk produk Rohde & Schwarz tertentu. Informasi keamanan dalam beberapa bahasa juga disertakan bersama produk. Ikuti petunjuk pemasangan yang disediakan.

Esta opción o este accesorio están diseñados para un producto Rohde & Schwarz en concreto. El producto va acompañado de información de seguridad en varios idiomas. Siga las instrucciones de instalación proporcionadas con el producto.

Esta opção ou acessório foi desenvolvido para um produto Rohde & Schwarz específico. Informações de segurança em vários idiomas acompanham o produto. Siga as instruções de instalação disponibilizadas.

2 Documentation overview

This section provides an overview of the R&S TSVP (test system versatile platform) user documentation.

All documents are delivered with the Generic Test Software Library ("R&S GTSL") installation package. After installing the software, you can open all the documentation from the Windows "Start" menu. Additionally, you can find detailed information about the software interfaces in the "R&S GTSL Help" folder in the Windows "Start" menu.

The user documentation and "R&S GTSL" installation package are also available for download in GLORIS at:

https://gloris.rohde-schwarz.com/

For details, see the R&S TSVP Getting Started manual.

2.1 Getting started manual

Introduces the R&S TSVP (test system versatile platform) and describes how to set up and start working with the product. It includes safety information.

A printed version is delivered with the instrument.

2.2 User manuals

Separate manuals are provided for the base units, the individual plug-in module types, as well as for the control software and the calibration tool:

- Base unit manual
  The base unit user manuals introduce the base units and describes how to set up and operate the product. It includes safety information and information on maintenance and instrument interfaces. It includes the contents of the getting started manual.
- Plug-in module manuals
  Contain the description of the specific modules. Basic information on setting up the R&S TSVP (test system versatile platform) is not included.
- In-System calibration user manuals
  Provide all the information required for installation and operation of the in-system calibration R&S TS-ISC solution.
- Control software
  - R&S GTSL
    Generic Test Software Library
  - R&S EGTSL
    Enhanced Generic Test Software Library
  - R&S IC-Check

Generic Test Software Library

2.3 System manual

Describes the complete R&S TSVP (test system versatile platform) as a whole, including the combined use of R&S CompactTSVP and R&S PowerTSVP, plug-in modules and generic test software. It also includes typical use cases.

Additionally, it describes known installation problems (hardware and software) along with possible solutions.

2.4 Service manual

Describes the self-test to check correct operation, troubleshooting and fault elimination, and contains mechanical drawings and spare part lists.

2.5 Printed safety instructions

Provides safety information in many languages. The printed document is delivered with the product.

2.6 Brochures and specifications

Separate brochures are provided for the base unit, the individual plug-in module types, as well as for the control software. The brochures provide an overview of the base units and each additional module, and also contain the technical specifications. They also list the hardware options and their order numbers, and optional accessories.

2.7 Release notes and open source acknowledgment

The release notes list new features, improvements and known issues of the current software version. In addition, the available firmware versions and the firmware update procedure for plug-in modules are described.

The open-source acknowledgment document provides verbatim license texts of the used open source software.

3 Welcome to the R&S TS-PSU

These operating instructions provide all the information required for installation, programming, and operation of the power supply / load module R&S TS-PSU on the R&S TSVP production test platform. They also include detailed information on the special features of the R&S TS-PSU, specifications, block diagrams, and pin assignment of the connector.

The R&S TS-PSU has a width of one slot and a height of four units. It has two floating channels that are completely independent of each other with a maximum power of 50 W each, a voltage range of +/-50 V and a maximum current of 3 A. The currents and voltages can be programmed in both the positive and negative range. Thanks to this 4-quadrant capability of the module, it can also be operated in applications as a load (sink). The measurement units integrated into the module for each channel make it possible to read back the current and voltage of any given channel. Using the multiplexer included in the module, it is also possible with the R&S TS-PSU to measure external voltages over time directly on the test object. The functionality of the module also includes extensive options for controlling individual channels via trigger lines and generating trigger signals. As with all modules available from Rohde & Schwarz, the R&S TS-PSU also has access to existing analog measurement buses in the R&S TSVP base unit with both channels. This measurement bus makes it possible to switch outputs without any extra wiring to other measurement and switching cards present in the R&S TSVP base units.

The CAN bus (Controller Area Network) present in the R&S TSVP is used to control the R&S TS-PSU.

The scope of delivery for the Power Supply/Load Module R&S TS-PSU includes the following components:

- PSU power module (for use in a front slot)
- PSU RIO module (use in the appropriate Rear-I/O slot)
- PSU AC/DC converter (external power supply of the R&S TS-PSU)

Features of the R&S TS-PSU

- Two fully independent, floating power supply units (up to 50 V / 0 … 50 V / 50 W)
- Source and sink operation with separate sensing (four-quadrant operation)
- Electronic load with up to 20 W continuous dissipated power
- Integrated voltage and current measurement
- Two integrated voltage measurement units for external use
- Recording of voltage or current values as they change over time
- External trigger of source and measurement via PXI trigger signals
- Over voltage, over current, over temperature and short circuit protection
- 4:1 Relay multiplexer (force and sense) per channel for panel test
- Access to analog measurement bus
- Self-test capability
- Softpanel for direct operation
- LabWindows/CVI driver support

- GTSL (generic test software library) in DLL format

4 Module tour

The R&S TS-PSU consists of several hardware components.

- Power module (for use in a front slot)
- RIO module to connect the PSU AC/DC converter to the PSU power module (for use in the corresponding slot on the back)
- AC/DC converter (external power supply of the R&S TS-PSU)

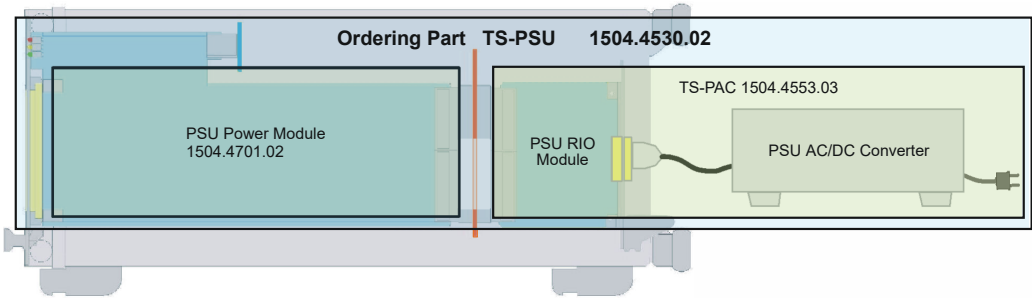

Figure 4-1: Components of order item R&S TS-PSU

4.1 Power module

The PSU power module is designed as a long plug-in card for front side insertion in the R&S TSVP production test platform.

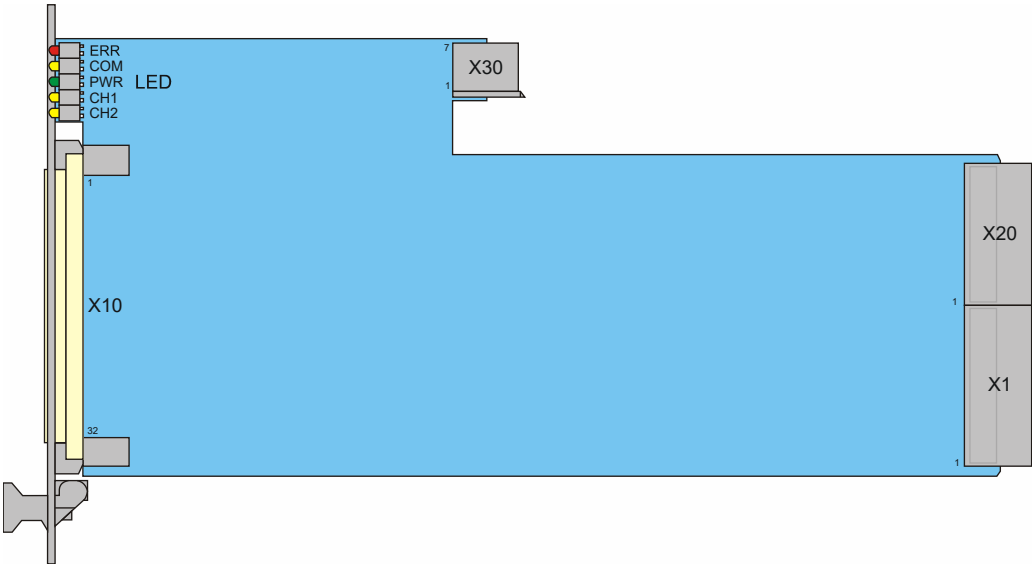

Figure 4-2: Overview of connectors and LEDs on the module

LEDs = Chapter 4.1.1, "Status LEDs", on page 16
X1 / X20 = Chapter 4.1.2, "Connector X1 / X20", on page 16
X10 = Chapter 4.1.3, "Connector X10", on page 16
X30 = Chapter 4.1.4, "Connector X30", on page 16

4.1.1 Status LEDs

The LEDs on the front indicate the current status of the module.

- "PWR" (green LED)
  Indicates that all necessary supply voltages are present.
- "COM" (yellow LED)
  Indicates data exchange via the interface.
- "CH1" / "CH2" (yellow LEDs)
  Indicates that channels 1 or 2 are working with constant current.
  If the LED blinks, it indicates that the protective mechanism of the corresponding channel has engaged. See Chapter 6.2.11, "Protective mechanisms", on page 29 for details.
- "ERR" (red LED)
  Indicates an hardware error if illuminated or blinking.

4.1.2 Connector X1 / X20

Type: PXI

Interface to connect the module to the control backplane of the R&S TSVP base unit.

See Chapter C.1.1, "Connector X1", on page 58 and Chapter C.1.3, "Connector X20", on page 61 for a detailed description of the connectors.

4.1.3 Connector X10

Interface to connect UUTs to the module.

See Chapter C.1.2, "Connector X10", on page 59 for a detailed description of the connector.

4.1.4 Connector X30

Interface for analogue bus access for self-test and current measurement.

See Chapter C.1.4, "Connector X30", on page 62 for a detailed description of the connector.

4.2 RIO module

The R&S TS-PSU RIO module has been specially developed for operation of the R&S TS-PSU. It is used on the back of the base unit. The module is fastened in place by two fastening screws.

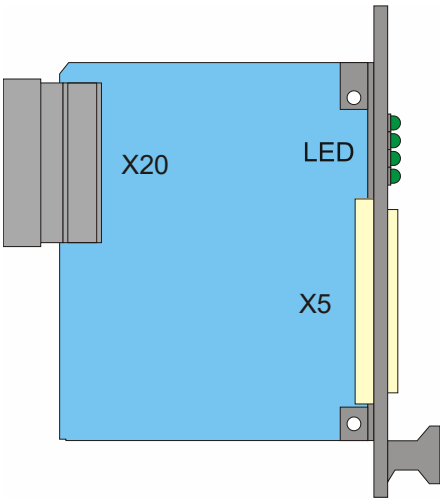

Figure 4-3: Overview of connectors and LEDs

LEDs = Chapter 4.2.1, "Status LEDs", on page 17
X5 = Chapter 4.2.2, "Connector X5", on page 17
X20 = Chapter 4.2.3, "Connector X20", on page 18

4.2.1 Status LEDs

The LEDs on the module indicate the current status of the module.

- "5 V" (green LED)
  Indicates that +5 V DC is present on channel 1.
- "8-55 V" (green LED)
  Indicates that +8...55 V DC is present on channel 1.
- "5 V" (green LED)
  Indicates that +5 V DC is present on channel 2.
- "8-55 V" (green LED)
  Indicates that +8...55 V DC is present on channel 2.

4.2.2 Connector X5

Type: AC/DC converter

Interface to connect the external AC/DC converter to the RIO module. Note that there are two variants of this connector, depending on the converter model you are using.

See Chapter C.2.1, "Connector X5 at PAC 100W2 (1504.4553.02)", on page 63 and Chapter C.2.2, "Connector X5 at PAC 100W2 V535 (1504.4553.03)", on page 64 for a detailed description of the connectors.

4.2.3 Connector X20

Type: PXI

Interface to connect the module to the control backplane of the R&S TSVP base unit.

See Chapter C.2.3, "Connector X20", on page 64 for a detailed description of the connector.

4.3 AC/DC converter

The external AC/DC converter is connected to the PSU RIO module. The AC/DC converter is an active device that you have to supply with power by connecting it to the AC mains power supply.

4.3.1 Status lights

A status light indicates when the converter is supplied with power and running. The loaction of the status light depends on the variant of the converter.

PAC 100W2 (1504.4553.02)

Status light is on the power switch.

PAC 100W2 V535 (1504.4553.03)

Status light is near the ventilation slots.

4.3.2 Power connector

Type: AC power connector

Interface to connect the converter to the mains power supply.

4.3.3 Connector X5

Type: AC/DC converter

Interface to connect the external AC/DC converter to the RIO module. Note that there are two variants of this connector, depending on the converter model you are using.

See Chapter C.3.1, "Connector X5 at PAC 100W2 (1504.4553.02)", on page 65 and Chapter C.3.2, "Connector X5 at PAC 100W2 V535 (1504.4553.03)", on page 66 for a detailed description of the connectors.

5 Installing the module

The R&S TS-PSU is a module installed on the front panel of R&S TSVP base units. It requires a R&S TS-PSU rear I/O module and an AC/DC converter.

1. Install the R&S TS-PSU front module as described in the user manuals for the base units.
2. **NOTICE!** The rear I/O module must only be used in combination with the R&S TS-PSU power module. Using it with other modules can damage the modules.

   Install the rear I/O module in the matching rear I/O slot as described in the user manuals for the base unit.
3. Connect the AC/DC converter to the rear module.
4. Connect the AC/DC converter to the AC mains supply.
5. Turn on the AC/DC converter.
6. **WARNING!** Risk of electric shock. The test environment, e.g the UUT or additional power supplies, can supply high voltages to the instruments. In this case, the voltage can also apply to the signal output connectors of the R&S TSVP, in particular the analog bus connector X2.
   Therefore, do not connect or disconnect devices from the X2 connectors while connected to an external power supply or UUT.

   Always connect both ends of the cable connecting the R&S CompactTSVP and R&S PowerTSVP. Thus, you avoid the risk of touching the X2 connector with a possibly hazardous voltage applied.

   Take the system into operation as described in the user manuals for the base unit.

Removing the module

► **CAUTION!** Risk of skin burns. The cooling body of the module can heat up during operation and cause skin burns when you touch it.
To avoid skin burns, let the module cool off before touching it.

Follow the installation instructions in reverse order.

6 Function description

6.1 General

The Power Supply/Load Module R&S TS-PSU contains two identically structured, floating analog channels. Unless otherwise noted, the following description applies to both channels. Figure 6-1 shows a block diagram of one channels.

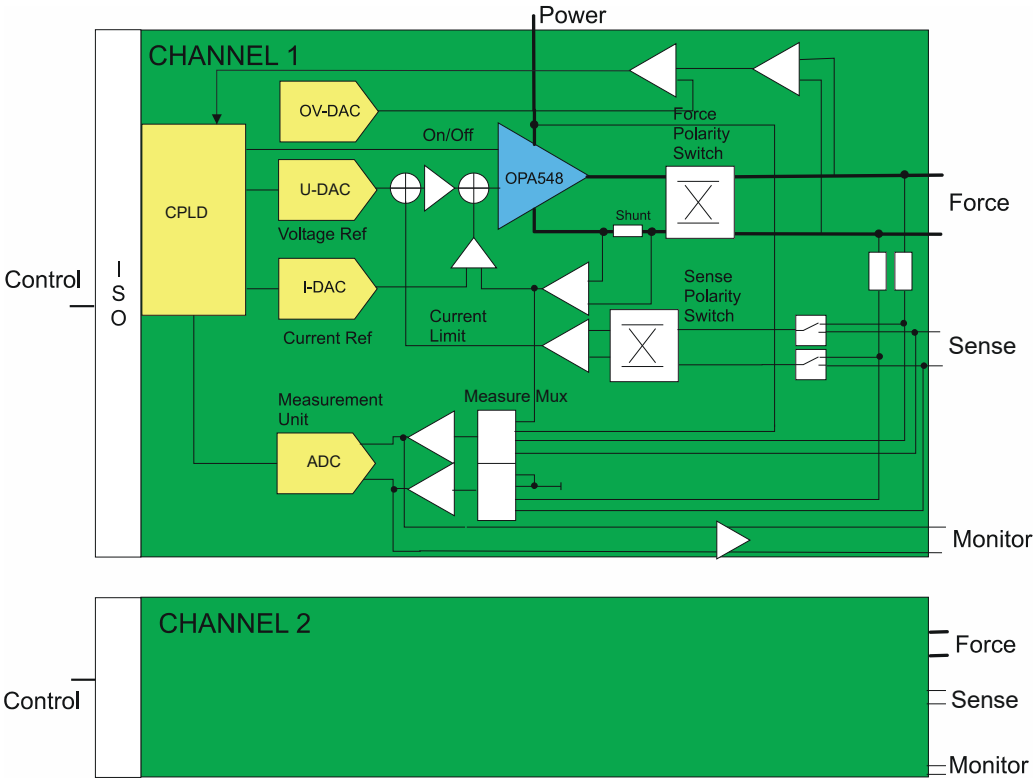

Figure 6-1: Block diagram of channels

6.2 Power supply/load unit

The Power Supply/Load Module R&S TS-PSU is designed as a 4- quadrant source consisting of a 2-quadrant output stage followed by a polarity switch. The output stage consists of a linear regulator with current and voltage feedback. The linear regulator receives its power through the PSU AC/DC converter.

The settings for output voltage and maximum current are used to configure the output stage.

Users can select between two voltage and three current ranges.

The following voltage ranges are available:

- 50 V
- 15 V

The following current ranges are available:

- 10mA
- 100mA
- 3A

For a summary of the possible combinations of voltages and currents, see the characteristic diagram in Chapter 6.2.1, "Characteristic diagram", on page 23.

The setting of current and voltage range determines the resolution of the module. Because of this, the smallest possible range appropriate for any given application should be used. The resolution of voltage setting is 16 bits plus a positive/negative sign. For current, 16 bits represent the quantity only; no positive or negative sign can be selected.

Below the maximum current set, the output stage works as a constant voltage source, otherwise as a constant current source, or switches off (depending on the configuration).

Please also refer to Chapter 6.2.11, "Protective mechanisms", on page 29, step 5.

Switching between source mode (Source) and load mode (Sink) is done automatically.

In sink mode, current is also regulated. In addition, the voltage is programmed to less than the externally applied voltage, to force current flow from the test object to the R&S TS-PSU. This may increase the voltage at the output to rise to the level of the external source, but not beyond the range (15 V, 50 V V).

Over-Voltage-Protection (OVP) should be adjusted appropriately to protect the output stage, especially if the voltage of the external source is higher than the range.

Using an external source

If an external source is applied to the R&S TS-PSU, it needs to be operated in a load mode. In these modes, the supply of the output stage is set to the fixed value of 55 V and thus it prevents a current flow too high on the internal backward diodes in the R&S TS-PSU.

Behaviour when the maximum current is exceeded can be defined by calling function `rspsu_Attr_CurrentLimitBehaviour()`. When „Regulate“ (default state) is selected in parameter behavior, the output current is limited; with “Trip” the output is turned off.

Example of sink operation:

Purpose: Discharging an accumulator with an output voltage of 8 V to 6 V with a maximum discharge current of 1 A. The internal resistance of the accumulator is 1Ω.

Setting R&S TS-PSU: U = 6 V, I = 1 A

The charged accumulator with U = 8 V is connected to the R&S TS-PSU. The R&S TS-PSU controls discharging of the accumulator based on the specified setting so that the current flows at a maximum of I = 1 A. Thus with an internal resistance of 1Ω and a maximum current of 3 A, the voltage difference between the output voltage of the R&S TS-PSU and the voltage of the accumulator must not exceed 1 V. It follows that at the beginning of discharge on the output of the R&S TS-PSU, a voltage of 7 V is present, which slowly drops to a value of 6 V as the accumulator discharges. Once the voltage of the R&S TS-PSU has reached 6 V, that value is maintained. As soon as the accumulator voltage has also fallen to 6 V, no more current will flow and discharging is complete.

6.2.1 Characteristic diagram

The maximum voltage or current values are determined by the characteristic data of the R&S TS-PSU. In addition to the absolute limits 50 V and 3 A, a maximum output power (CURRENT_LIMIT * VOLTAGE_LEVEL) of 50 W must not be exceeded in source operation and 20 W in sink mode (continuous operation). This results in the characteristic diagram for Source and Sink mode shown here (Figure 6-2). Special cases must be taken into consideration for low voltages.

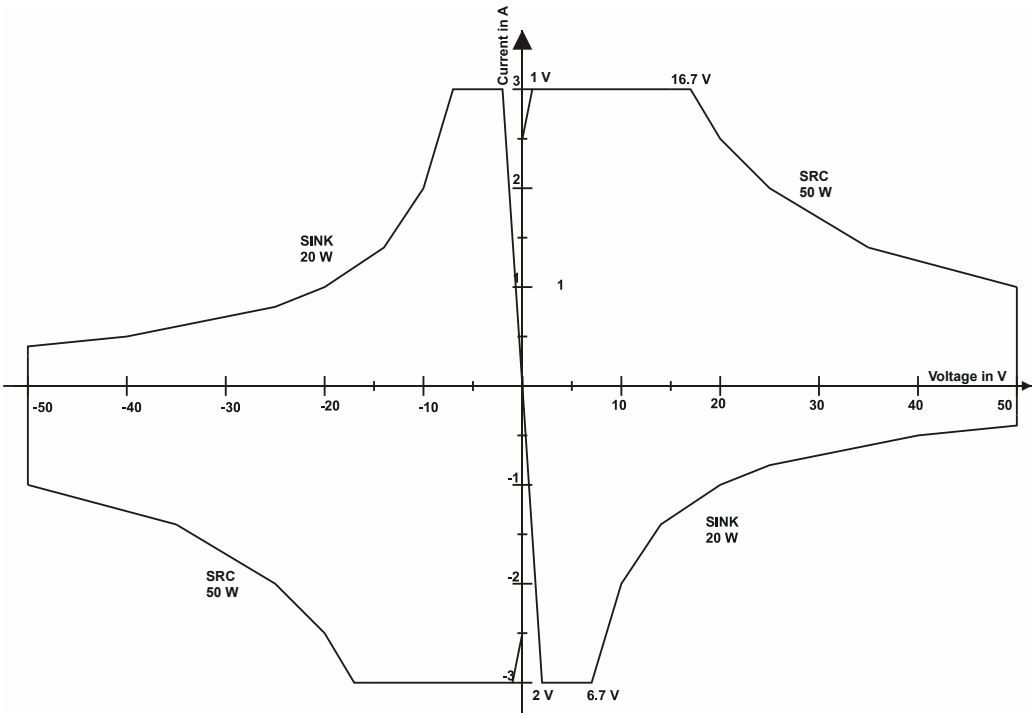

Figure 6-2: Current/voltage characteristic diagram

6.2.2 Reverse polarity in load case

You can connect an external source to the R&S TS-PSU. The external source can have an opposite polarity to the output voltage defined for the R&S TS-PSU. In that case, the R&S TS-PSU attempts to impose the polarity you have set.

1. Turn off the R&S TS-PSU.
2. Connect the external source to the R&S TS-PSU.
3. **NOTICE!** Risk of instrument damage. External sources can have a polarity opposite to the output voltage defined for the R&S TS-PSU. If the polarity of the R&S TS-PSU is set incorrectly, the external source can get damaged if the R&S TS-PSU changes the polarity of the external source.
   To avoid damage to the external source, make sure to set the polarity of the R&S TS-PSU correctly.

   Select the correct polarity of the R&S TS-PSU based on the polarity of the external source.

   The behavior of the R&S TS-PSU depends on the ability of the external source to provide current.
   - Weak external sources whose current remains below the maximum current
     When you connect a weak external source, the R&S TS-PSU forces the polarity set on its pins.
   - Strong external sources that can provide a high current
     When you connect a strong external source, the R&S TS-PSU remains in the externally applied quadrant, even though according to specification it should be working in a different quadrant. The R&S TS-PSU sinks the maximum current set. After discharge (voltage on the pins is approximately < 0.8 V) of the external source, the R&S TS-PSU switches to the desired polarity and from then on changes the external source with reverse polarity.
4. Select the appropriate load mode.
5. Define an appropriate maximum current, especially for external sources that are able to provide high current.
6. Enable the R&S TS-PSU and start the measurements.

6.2.3 Inductive loads

Turning off inductive loads suddenly can generate very high voltage spikes. Flyback diodes should therefore be used to protect the output stage of the R&S TS-PSU.

If it is not possible to use flyback diodes, proceed as follows when switching off inductive loads:

1. Set the output voltage = 0 V
2. Wait until the current drops to close to 0 A

3. Turn off R&S TS-PSU electronically
4. Open the relay(s)

6.2.4 External sensing

To compensate for voltage drops in the line to the external load or source, the R&S TS-PSU can be set to external sensing. Then two additional lines directly to the test object are required. The measured voltage difference on these lines is automatically regulated to the target voltage by the R&S TS-PSU.

If the R&S TS-PSU is operated with external sensing, the sense lines must be connected to corresponding input pins on the front connector and switched through the relay matrix to the sense inputs. Otherwise an incorrect voltage will be assumed for regulation of the output voltage, causing an incorrect output voltage to be generated. For reasons of safety, however, the error voltage of the output stage is limited to a difference of approximately 4 - 5 V. This limit also applies if the sense lines are accidentally shorted or connected with reverse polarity. This determines a maximum correctable error voltage based on maximum line resistances of 4 - 5 V.

Since the pins for external sensing are also used for external voltage measurement, no additional external voltage can be measured in "external sensing" mode.

6.2.5 Current limiting when using matrix relays in the output path

Reed relays are used as matrix relays (see Chapter 6.4.1, "Matrix and front relay", on page 32) in the R&S TS-PSU with a current load capacity of 1 A. Because of this, when a matrix relay from the output path to the analog bus is closed by the software, automatically a current limit of 1 A is turned on. If current limiting was previously set to a lower value, the lower value will be used.

This function can be disabled. In this case, the relays will remained unprotected.

Default setting: „Function enabled“

This protective mechanism is subject to some restrictions. Since current regulation involves a certain delay, peak currents that could cause damage to the relay contacts may nevertheless occur. To prevent such damage, the relay contacts should normally be switched to a no-current state. For this the R&S TS-PSU offers a command to switch (inhibit) outputs on and off electronically by software.

6.2.6 Power dissipation and settling time

The linear regulator in the PSU power module is supplied with power by an external PSU-AC/DC converter. To perform the controlling functions correctly, the linear regulator always requires a supply voltage that is at least approx. 5 V above the respective output voltage.

To check the output voltage of the PSU-AC/DC converter, the user has three different options:

- Mode 1: automatic preselection through the firmware
- Mode 2: Control via the PSU output voltage
- Mode 3: Manual setting via the internal D/A converter

In Mode 1 (“automatic preselection through the firmware”), the firmware selects mode 2 or mode 3 as the optimum operating mode, depending on the current setting. Basically, at a current setting below 400 mA (50 V range) or 1.3 A (15 V range), the PSU-AC/DC converter voltage is set to a fixed value (55 V or 20 V), since the maximum dissipation loss cannot be exceeded in this case (Mode 3) . In all the other cases, the PSU-AC/DC converter voltage is controlled through the PSU output voltage (Mode 2).

Mode 2 (“control via the PSU output voltage”) ensures that the output stage is always supplied with the minimum voltage required, which keeps the dissipation loss to a minimum too. A disadvantage is that the settling time may be considerably higher with an increase in the nominal output voltage, since the setting speed of the PSU-AC/DC converter output voltage is limited. Approx. 3.5 A are available for the rising edge, which - apart from the output voltage - also have to charge the capacities in the PSU-AC/DC converter and in the PSU power module.

In Mode 3 (“manual setting via D/A converter”), an increase in the PSU output voltage can be achieved at a maximum speed within the range of from 0 V up to the set supply voltage of - 5 V. Excessively high supply voltage in combination with high current values results in high dissipation loss of the output stage and thus, after a certain delay, in thermal cut-out. The static dissipation loss limit is at approx. 22 W, i.e. at 3 A at approx. 7 V of overvoltage.

As a rule, the PSU-AC/DC converter output voltate is aways increased at the maximum possible speed. The speed is limited only by the available re-charging current (approx. 3.5 A) and the given capacities on the PSU-AC/DC converter and the PSU power module (together approx. 300 µF).

A decrease in the PSU-AC/DC converter output voltage is effected at different speeds depending on the respective power consumption (the more power, the faster). The time constant without any current flow is approx. 100 ms.

6.2.7 Wiring channels in series (cascading)

Serial wiring of the module's two output channels is possible using external wiring.

1. Turn off the R&S TS-PSU.
2. **WARNING!** Risk of electric shock. Serial wiring allows you to generate voltages of up to 100 V. Voltages higher than 30 V RMS, or 42 V peak, or 60 V DC are regarded as hazardous contact voltages. Direct contact with them can cause serious injuries.
   Make sure that only electrically skilled persons use the products for measurements on hazardous contact voltages. For more information on how to avoid serious injuries, follow the safety instructions for working with high voltages. The safety instructions are part of the delivery of the R&S TSVP base unit.

In addition, voltages higher than 120 V can damage or destroy the module. Floating channels must therefore never exceed a voltage of 120 V against ground. This rule applies to each individual connection pin and is even more important for cascaded sources (for example when they are switched together in the adapter).

Connect the wires to the channels of the R&S TS-PSU.

3. **NOTICE!** Risk of instrument damage. Serial wiring can also lead to high currents running through the system. High currents can destroy the module.
   To avoid damage to the module, make sure that the current stays below the values the module can handle.

   Set the current limits of the two channels to approximately the same value (no more than 1 % difference).
   If the current exceeds the value set, one channel will first regulate the voltage to a lower value; the second channel will follow somewhat later. The difference is determined by the amplification and offset error of the current regulator.

4. Set up the system to remain in constant voltage mode.

5. **NOTICE!** Risk of an internal short-circuit. Each separate GND relay must be set specifically. Both GND relays must never be closed together. Doing so would cause a internal short circuit.

   Set each separate GND relay specifically.

6. Enable the R&S TS-PSU output.

Figure 6-3 shows a typical permissible voltage configuration between analog buses and ground.

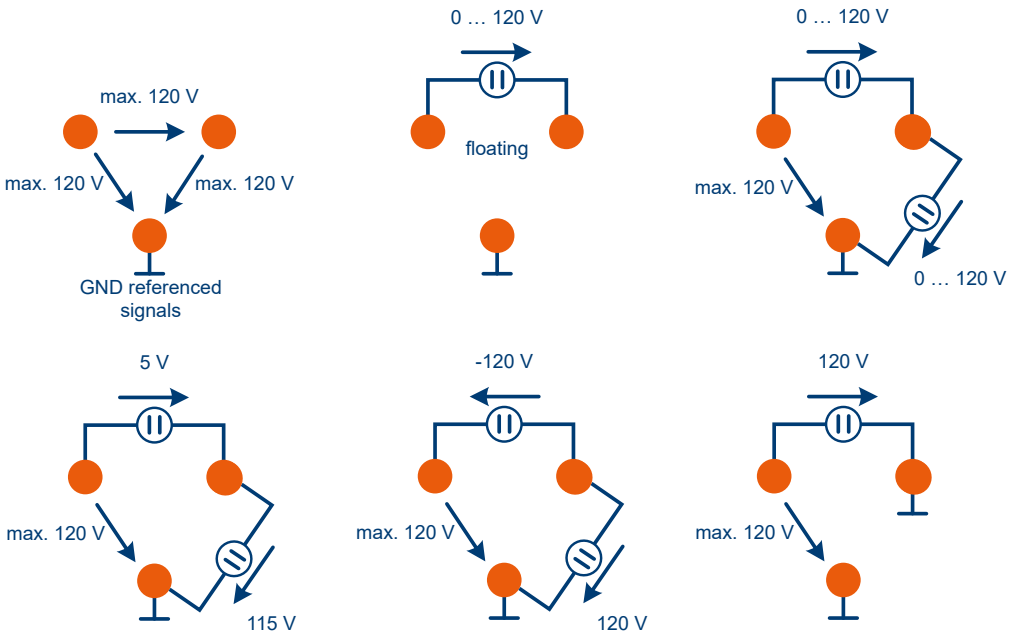

Figure 6-3: Permissible voltages on analog bus lines

6.2.8 Connecting channels in parallel

The R&S TS-PSU is **not** designed for parallel wiring of outputs and the possible resulting currents of up to 6 A . Because of this, the outputs must **not** be wired in parallel. Because of the 4-quadrant capability, equalisation currents could flow between the two channels (with one source working in source mode, the other in sink mode).

6.2.9 Electronic on/off and PWM

The R&S TS-PSU has an electronic switch for rapid On / Off switching of the output path. For reasons of safety, the module is automatically switched to “Off” after initialisation.

The R&S TS-PSU also offers an option for quickly switching back and forth between 0 V and the programmed value with the pulse width modulator (PWM) integrated into the module. This makes it possible, depending on the voltage setting, to generate pulses with a width of at least 50 µs and a maximum frequency of approximately 10 kHz.

6.2.10 Dynamic operation

Dynamic opeation refers to the operation with changing current and/or voltage. It can be achieved as follows:

- Frequent and rapid (<100 ms) reprogramming of the voltage and/or current setting
- Frequent and rapid change of the polarity
- Frequent and rapid change of the load
- PWM Operation
- Output of an “arbitrary waveform”
- Triggered output with frequent and rapid programming of a new voltage and/or current value
- “gated” Operation

With dynamic operation, the descriptions in Chapter 6.2.6, "Power dissipation and settling time", on page 25 must be heeded by all means with respect to settling time and dissipation loss. Especially with high currents (above 400 mA in the 50 V range, 1.3 A in the 15 V range), the setting of the supply voltage of the output stage is important.

As a rule, this supply voltage cannot be set at any desired speed. Thus, if this voltage is controlled via the mode “Control via the PSU output voltage”, the maximum dissipation loss may still be exceeded, sine the supply voltage decreases gradually on the trailing edge of the PSU output voltage, which results in the maximum dissipation loss being exceeded.

An example in this context: Output short-circuited or loded with low resistance, switched on, current = 0 A, voltage does not matter (e.g. 5 V). With Mode1 (“automatic preselection through the firmware”), the PSU supply voltage is set to 55 V. If the current limit is now set to 3 A, the firmware will switch to “Control via the PSU output voltage”. Since the output voltage is almost 0, the voltage of the PSU-AC/DC converter is reduced, which, however, takes some time. At first, up to a noticeable reduction, the

output stage must process up to 3 A x 55 V = 165 W, which results in thermal shutdown with an already heated output stage (due to any previous currents).

6.2.11 Protective mechanisms

A series of protective mechanisms are integrated into the output stage to prevent damage to the R&S TS-PSU and externally connected devices. When necessary, these protective mechanisms turn off the linear regulator of the appropriate channel and open the relays of the force lines. The LEDs assigned to the channel (CH1 or CH2) begin to flash. The channel cannot be connected and activated again until the user has confirmed that the protective mechanism has engaged. Driver function `rspsu_ResetOutputProtection` is used for this purpose. It can also be implicitly called by resetting the module (`rspsu_reset`). The module software can also be used to query whether a channel is in voltage or current mode, and whether a protective mechanism has been triggered.

The module software can also be used to query whether a channel is in voltage or current mode, and whether a protective mechanism has been triggered.

1. **Over-voltage protection**
   If the voltage at the force pins exceeds the programmed threshold value, the protective mechanism will respond. To ensure effective operation, the value must be far enough above normal operation so that minor deviations do not cause triggering.
2. **Current monitoring**
   High currents may flow if regulation fails or in the event of overload. To prevent damage, overcurrent protection engages at approximately 120 % of the current range.
   Example:
   With a the current range of 3 A, overcurent protection engages at 3.6 A.
3. **Excess temperature protection**
   Several temperature sensors are built into the R&S TS-PSU to protect the linear regulator. One of these temperature sensors continuously monitors the temperature on the heat sink of the PSU power module. If the limit value of 70°C is exceeded, the protective mechanism for the linear regulator engages. In some applications, however, (for example PWM mode at high frequency and high current), it is possible that only the linear controller will heat up very quickly, without the temperature of the heat sink coming close to the limit temperature of 70°C. A temperature sensor integrated into the linear controller monitors its temperature in addition and switches off the linear controller when necessary to prevent it from being destroyed by excess heat. This condition is also detected by the R&S TS-PSU and results in the affected channel being turned off.
4. **Monitoring power supply voltages**
   If one of the power supply voltages is not correctly applied, this will cause the protective mechanism to engage and the yellow LED for that channel will begin to flash.

5. **Current limiting**
   The behaviour of the current limiting function can be configured. With the “regulate” setting, the set current is controlled (default), with the “trip” setting, the system is switched off in the case of a current flow above the set current value.

6.3 Measurement unit

The integrated measurement unit of the Power Supply/Load Module R&S TS-PSU consist of 16-bit ADC with a sampling rate of 10 kHz and a front end multiplexer for selecting different sources or measurement points. The measurement unit is closely connected to the output stage of the associated channel and works on the same internal measurement reference point.

6.3.1 Measurement options, resolution

The R&S TS-PSU offers the following measurement options:

- Measurement of output voltage on the force pins
- Measurement of voltage on the sense pins
- Measurement of currents via internal shunt

When the output stage is switched to “internal sense” mode, any external voltage can be measured on the sense pins. Without additional wiring only differential measurement is possible, since the R&S TS-PSU cannot switch an internal ground connection to CHx_SHI or CHx_SLO. Due to an external wiring from CHx_LO to CHx_SLO and closing of the ground relay, “single ended” measurement is also feasible. The difference in voltage may be up to 50 V. The maximum voltage of each individual signal must not exceed 50 V against CHx_LO.

The voltage measurement range is always 50 V.

The current measurement range is specified by the setting of the R&S TS-PSU. For example, if the range is set to 10 mA, the range of the measurement unit will also be ±10 mA.

6.3.2 Sampling

The measurement unit implemented on the R&S TS-PSU makes it possible to record individual values, average values, or entire waveforms. To record transient processes or current and voltage values over time, the R&S TS-PSU is able to record the selected source at a sampling rate of up to 10 kHz and save measurement values. The available memory depth is designed for up to 10000 measurement values. The sampling rate, duration of recording, start delay, and triggering can be freely selected. At the maximum sampling frequency, an interval of one second can still be measured. Correspondingly longer recording is possible at lower sampling frequencies. The measurement can be started via internal or external triggers. It is also possible to start the measurement in the background and retrieve the measurement values later.

6.3.3 Monitor output

The R&S TS-PSU has two pins on the X10 front connector that pass the input voltage of the ADC to the output through a buffer. In this way, the selected measurement source can be recorded using an external oscilloscope or digitizer. The voltages and value range on these monitor outputs (CHx_MHI and CHx_MLO) are as follow:

Table 6-1: Voltages and value range of monitor outputs

Selected source	**Source signal for 2.50V full scale of monitor voltage**	**Conversion factor**
Force voltage	52.7 V	Source signal in V = 21.08 * monitor voltage in V
Sense voltage	52.7 V	Source signal in V = 21.08 * monitor voltage in V
Current 10 mA	12.6 mA	Source current in mA = 5.02 * monitor voltage in V
Current 100 mA	120 mA	Source current in mA = 48.1 * monitor voltage in V
Current 3 A	3.73 A	Source current in A = 1.49 * monitor voltage in V

The monitor output signal must be measured differentially at high impedance. 10 kΩ is built in internally before CHx_MHI and CHx_MLO each as a protective mechanism against short-circuits.

Signals CHx_MHI / CHx_MLO must be measured floating against the force or sense potential. Depending on the quadrant of the source, the potential against CHx_MLO approximates CHx_LO (output voltage positive) or CHx_HI (output voltage negative). This means the common mode voltage on CHx_MLO against CHx_LO is approximately 0 V to approximately -50 V.

6.4 Relay matrix

The relay matrix implemented in the Power Supply/Load Module R&S TS-PSU is used for flexible connection and simple wiring of test objects. Its layout is as follows:

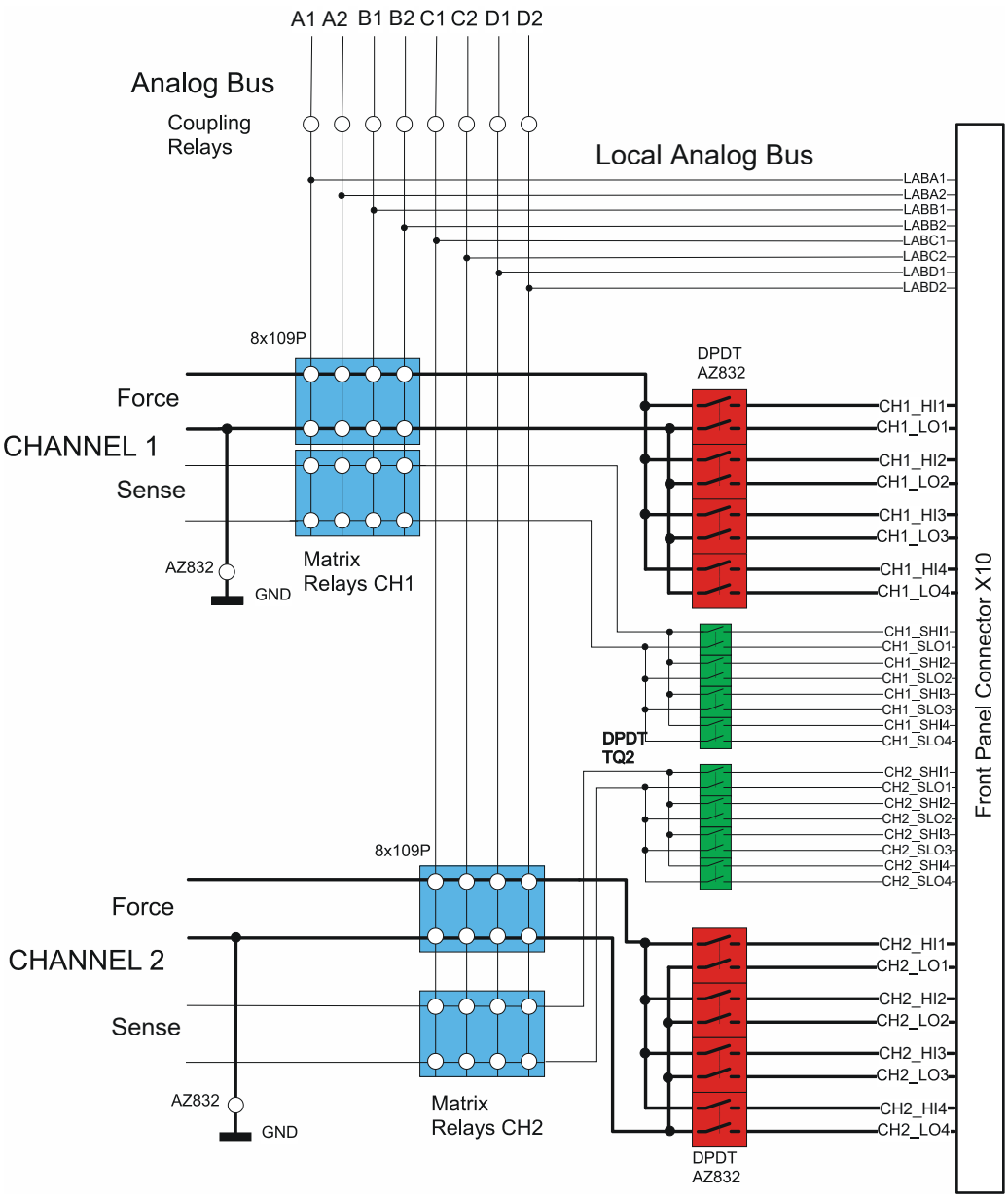

Figure 6-4: Signal connection

6.4.1 Matrix and front relay

The front lines can be switched via the front relays to four outputs on the front connector.

The Pins on the front connector are designed for a current load of max. 1 A per pin, i.e. with higher currents, several pins must be used to prevent that the plug-type connector is destroyed due to overload.

Four sense or measurement inputs (two-pin) can also be directed via the sense lines with a maximum current of 1 A to the source or measurement unit.

All lines have access to the local analog bus through the matrix relay and via the coupling relays to the analog bus in the R&S CompactTSVP

All matrix relays and coupling relays can switch a maximum of 1 A. For safety reasons, current limiting is automatically reduced to 1 A when a matrix relay is in use, although this mechanism offers only limited, additional protection (see Chapter 6.2.5, "Current limiting when using matrix relays in the output path", on page 25).

If you need to operate the R&S TS-PSU with an external source, you need to switch the R&S TS-PSU to a load mode, before it is configured, switched on or connected to the external source. When you activate the load mode, the internal supply of the output stage is set to the fixed value of 55V. It then prevents a current flow too high on the internal backward diodes in the R&S TS-PSU, that could damage the relays.

To prevent the relay contacts from being destroyed, the relays should only be switched if no current is flowing through them. Before a contact is activated, the channel should be turned off electronically.

The following functions are available to operate these relays:

- `rspsu_Connect`
- `rspsu_Disconnect`
- `rspsu_DisconnectAll`

The function `rspsu_DisconnectAll` can be used to break all connections that were set up with `rspsu_Connect`. `rspsu_DisconnectAll` has no effect on the configuration of the coupling relays or ground relay.

6.4.2 Coupling relays

The coupling relays connect the local analog bus on the module with the analog bus in the R&S CompactTSVP. The function `rspsu_ConfigureCoupling` defines the status of the coupling relays. Please consider that the function `rspsu_DisconnectAll` does not open these relays.

6.4.3 Ground relays

Each channel of the R&S TS-PSU has its own ground relay that can be used to connect the CHx_LO signal to ground. PSU channels are operated ground free in their basic state. The function `rspsu_ConfigureGround` is used to determine whether a channel is being operated with ground reference or ground free. Also note that `rspsu_DisconnectAll` does not affect the ground relay!

For technical reasons, a non-switched PSU channel (all matrix and front relays of a channel are opened) is automatically grounded with the ground relay. It is automatically opened again before another connection is made if the channel is configured ground-free.

6.5 Trigger unit

6.5.1 Trigger outputs

The Power Supply/Load Module R&S TS-PSU can generate trigger signals on lines PXI_TRIGn (X20) and XTOn (X10). The polarity of the trigger signal can be adjusted. The following events may cause a change in the level on trigger lines:

- Call to function `rspsu_InitiateTrigger`. This function generates a “General Purpose” trigger (trigger pulse approximately 1 µs long) if trigger source “GP” has been configured to one or more trigger outputs by `rspsu_ConfigureTriggerOutput`.
- Switching a channel on or off if trigger source “CH1” or “CH2” has been configured to one or more trigger outputs by `rspsu_ConfigureTriggerOutput`.

6.5.2 Trigger inputs

Trigger signals on trigger inputs PXI_TRIGn (X20) and XTIn (X10) can start a measurement value recording (voltage or current) in the measurement unit or set the output voltage and current limiting of the source to a new value. The two channels can be triggered synchronously.

6.6 Operation as electronic load

6.6.1 General

The following additional modes are available to operate the Power Supply/Load Module R&S TS-PSU as an electronic load:

- Operation as constant current sink (Constant Current Mode)
- Operation as a constant resistance load (Constant Resistance Mode)
- Operation as a load with constant power (Constant Power Mode)

In these modes, the device software uses both the supply / load unit and the measurement unit to control the electronic load. Therefore, the measurement unit cannot be used by the operator in these modes. In these modes, the applied voltage and the current flowing are continuously measured by the measurement unit and evaluated by the device software depending on the selected mode. The modes can be activated using the `rspsu_ConfigureMode` function.

If an external source is applied to the R&S TS-PSU, it needs to be operated in a load mode. In these modes, the supply of the output stage is set to the fixed value of 55V and thus it prevents a current flow too high on the internal backward diodes in the R&S TS-PSU.

In the constant current mode, the measured voltage is used to monitor the polarity of the connected source. The measured current is compared with the reference value. If it lies within the tolerance range, the status „Regulated“ is indicated.

In the resistance load and constant power load modes, the input voltage is continuously measured and the new value for limiting the current is calculated and set. When the applied voltage is stable and thus current limitation is correctly set, a current measurement is performed. If the measured value lies within the expected tolerance range, regulation is engaged and the „Regulated“ status bit is set.

The measuring rate and the adjustment speed of the R&S TS-PSU are limited. In the worst case, the time for adjusting the current is 12.8 ms. For the current to be adjusted, the applied voltage must be stable. The load modes cannot therefore be used for AC voltages.

Inductance in series to the load can impair the stability of the regulation. It counteracts the change in the current:

dU = -L * di / dt.

A current increase of 1 A / µs with an inductance of 1 µH creates a voltage drop of 1 V.

To counteract voltage drops, the regulation algorithm limits the current increase to 100 mA / 400 µs. In addition, the integral component of the PI algorithm counters voltage fluctuations. This stabilises the regulation.

Other measures to prevent oscillating regulation include:

- Connecting a capacitor parallel to the output to stabilise the voltage.
- Choosing the largest possible wire cross-section to connect the load.
- Using the shortest possible wires.
- Keeping the space between the outward and return wires to a minimum (twisted wires are the optimum solution).

The current regulation status can be queried using the `rspsu_QuerySinkState` driver function. As well as a status register, this function also returns the measured voltage and current values. As the measurement unit cannot record current and voltage simultaneously and only with a delay, two bits in the status register indicate the validity of the other return values. If the return values are invalid, the value `IVI_VAL_NAN` is returned for current and/or voltage.

The following bits are defined in the status register:

Table 6-2: Bits in status register for load simulation

Symbolic name	Value	Meaning
RSPSU_SS_VOLT_VALID	0x0001	This bit is set if a valid voltage value is present. The associated „OVR“ bit (over range) is then also valid. After turning on the R&S TS-PSU in the load modes, it takes some time until the first measurement result is available.
RSPSU_SS_CURR_VALID	0x0002	This bit is set if a valid current value is present. The associated „OVR“ bit (over range) is then also valid. After turning on the load, it takes some time until the first measurement result is available. The current measurement is only performed if the measured voltage is stable. Each time a change in voltage is measured, this bit is initially reset and current measurement interrupted.
RSPSU_SS_REGULATED	0x0004	This bit is set if the current flowing into the R&S TS-PSU module and measured using the measurement unit lies within a tolerance range around the reference value. The following tolerances are used: 10 mA range ± 134 µA 100 mA range ± 1.3 mA 3 A range ± 40 mA The applied voltage must be stable for the current measurement to be performed. This bit is reset when the input voltage changes.
RSPSU_SS_VOLT_OVR	0x0010	This bit is set if the measured voltage is outside the set range. In this case, IVI_VAL_NAN is returned for the measured value and the R&S TS-PSU is shut down. The shutdown must be acknowledged by the operator before the channel can be used again. Refer to chapter Chapter 6.2.11, "Protective mechanisms", on page 29.
RSPSU_SS_CURR_OVR	0x0020	This bit is set if the measured current is outside the set range. In this case, IVI_VAL_NAN is returned for the measured value.

The other bits in the status register are used for internal purposes and can thus have different values.

Switching on the *External Sensing* and usage of the sense wires increases the accuracy during operation as a constant resistance load (Constant Resistance Mode) or operation as a load with constant power (Constant Power Mode).

6.6.2 Operation as constant current sink

Examples of the use of this mode include discharging batteries or determining the capacity of a battery. A constant current is drawn from the connected source until the set output voltage (final discharging voltage) is reached. This mode differs from „Normal“ mode in that the polarity of the R&S TS-PSU is automatically adjusted to the connected source. To do this, the voltage is measured using the measurement unit and the load unit is reconfigured if required (reverse polarity protection). Refer to Chapter 6.2.2, "Reverse polarity in load case", on page 24.

This mode is configured using the `rspsu_ConfigureConstCurrent` function. This is used to set the current to be drawn and the output voltage of the R&S TS-PSU. To achieve high accuracy, an appropriate range should be selected for the voltage and current.

The externally applied voltage may not exceed the upper limit of the range. The over voltage protection should be adjusted appropriately to protect the limit. Refer to Chapter 6.2, "Power supply/load unit", on page 21.

6.6.3 Operation as resistance load

The main characteristic of this mode is that the load current depends on the applied voltage in line with Ohm's Law. An electronic resistance load is used to load external sources with a constant resistance. Practical applications include:

- Power pack test
- Battery test
- Testing microprocessor voltage regulation circuits

The applied voltage is continuously measured by the device software and the current limitation is adjusted depending on the programmed resistance value. The R&S TS-PSU output voltage is set to 0 V. When the applied external voltage has a stable value, regulation is verified using the current measurement.

The `rspsu_ConfigureConstResistance` function can be used to set the required resistance value. The value that can be reached depends on the selected ranges. The following table shows the range limits.

Table 6-3: Range limits for operation as resistance load

Current range	**3 A**		**100 mA**		**10 mA**	
Voltage range	**15 V**	**50 V**	**15 V**	**50 V**	**15 V**	**50 V**
R_{min}	2/3 Ω	2/3 Ω	5 Ω	5 Ω	50 Ω	50 Ω
R_{max}	1500 Ω	5000 Ω	15 kΩ	50 kΩ	150 kΩ	500 kΩ

Note that the maximum resistance can only be reached if the applied voltage is sufficiently high. The higher voltage guarantees that a current is flowing that can be regulated by the R&S TS-PSU. However, the externally applied voltage may not exceed the upper limit of the range. The over voltage protection should be adjusted appropriately to protect the limit. Refer to Chapter 6.2, "Power supply/load unit", on page 21. The minimum resistance is only reached if the voltage is low enough to ensure that the current limitation range is not exceeded. For regulation to continue functioning correctly, the voltage may not be lower than 0.5 V.

6.6.4 Operation as load with constant power

The main characteristic of this mode is that the load current depends on the applied voltage and a set power. Therefore, an external source is loaded with a constant power.

In this mode, the voltage is also measured by the device software and the current limitation is adjusted accordingly. The R&S TS-PSU output voltage is set to 0 V.

The `rspsu_ConfigureConstPower` function can be used to set the required power. The value that can be reached depends on the selected ranges. The following table shows the range limits.

Table 6-4: Range limits for operation as resistance load

Current range	**3 A**		**100 mA**		**10 mA**	
Voltage range	**15 V**	**50 V**	**15 V**	**50 V**	**15 V**	**50 V**
P_{min}	5 mW	5 mW	0,5 mW	0,5 mW	50 µW	50 µW
P_{max}	20 W	20 W	1,5 W	5 W	0,15 W	0,5 W

Note that the minimum power can only be reached if the applied voltage is sufficiently low. However, the voltage may not be lower than 0.5 V. At voltages of less than 0.1 V, the current limitation is always set to the lowest possible value in the currently selected range. The maximum power is then only reached if the voltage is sufficiently high. This means that the maximum current in the range is not exceeded. The externally applied voltage may not exceed the upper limit of the voltage range. The over voltage protection should be adjusted appropriately to protect the limit. Refer to chapter 5.2.

For voltage jumps at the electronic load input or when turning on, when regulating the current the external source can be temporarily loaded with higher currents than in the regulated state. If the voltage from the source then drops, the requirement for constant power regulates the current limitation to a higher value. If the external source cannot supply this current and the voltage falls further, an unexpected operating point occurs. In this case, it makes sense to initially apply a lower load to the source.

6.6.5 Regulation accuracy

The regulation accuracy in „Constant Resistance“ and „Constant Power“ mode depends on the voltage measurement accuracy and the accuracy of the adjustable current for current limitation.

The data sheet includes the following accuracies:

Voltage measurement accuracy:

- ± (0.1% + 50 mV)

Current regulation accuracy:

- in 10 mA range: ± (0.4% + 20 µA)
- in 100 mA range: ± (0.4% + 200 µA)
- in 3 A range: ± (0.4% + 6 mA)

The regulation accuracy can be calculated as follows:

The input voltage is used to calculate the minimum / maximum measured voltage:

- $U_{min} = U - (U * 0.1\% + 50\ mV)$
- $U_{max} = U + (U * 0.1\% + 50\ mV)$

The minimum / maximum measured voltage can be used to to calculate the minimum / maximum target current:

In „Constant Resistance“ mode:

- $I_{nom,\ min} = U_{min} / R_{nom}$
- $I_{nom,\ max} = U_{max} / R_{nom}$

In „Constant Power“ mode:

- $I_{nom,min} = P_{nom} / U_{max}$
- $I_{nom,max} = P_{nom} / U_{min}$

By specifying the current accuracy of the source, $I_{nom,\ min}$ and $I_{nom,\ max}$ can be used to calculate the minimum / maximum value of the set current limitation.

For example, for the 3 A current range:

- $I_{min} = I_{nom,min} - (I_{nom,min} * 0.4\% + 6\ mA)$
- $I_{max} = I_{nom,max} + (I_{nom,max} * 0.4\% + 6\ mA)$

The minimum current limitation value I_{min}, the maximum current limitation value I_{max} and the input voltage can be used to calculate the minimum resistance R_{min}, the maximum resistance R_{max}, the minimum power P_{min} and the maximum power P_{max}.

- $R_{min} = U / I_{max}$
- $R_{max} = U / I_{min}$
- $P_{min} = U * I_{min}$
- $P_{max} = U * I_{max}$

The graphs below show examples of the maximum error depending on the reference value and the measured voltage.

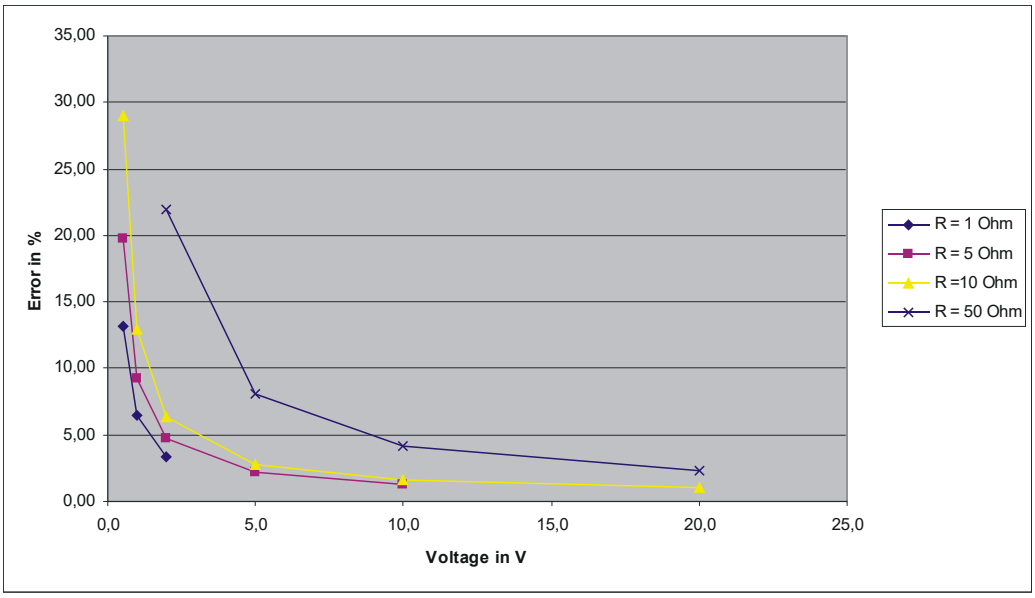

Figure 6-5: Error in „Constant Resistance“ mode in 3 A range

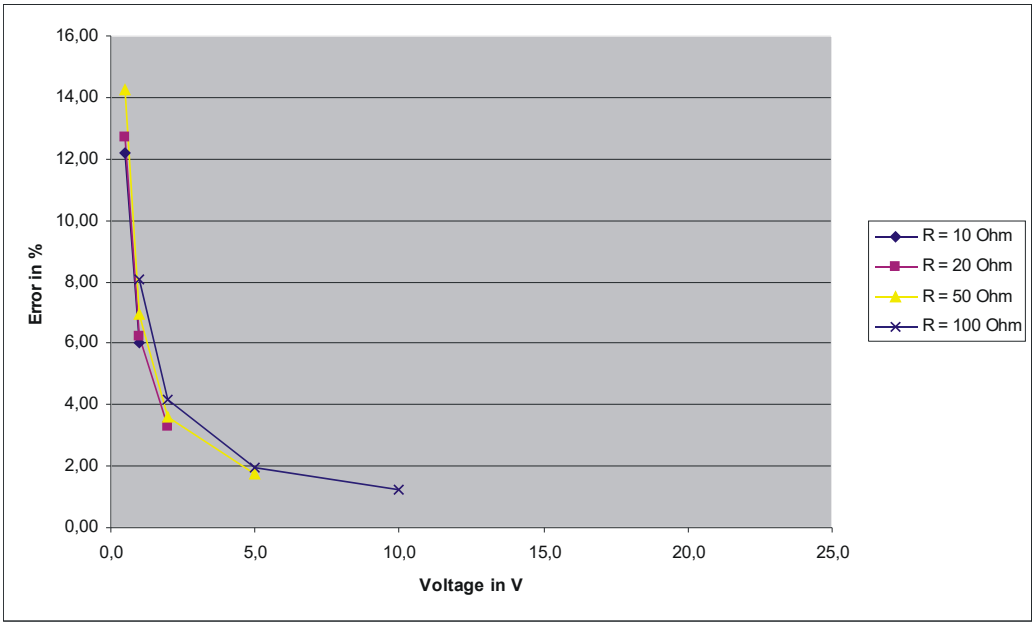

Figure 6-6: Error in „Constant Resistance“ mode in 100 mA range

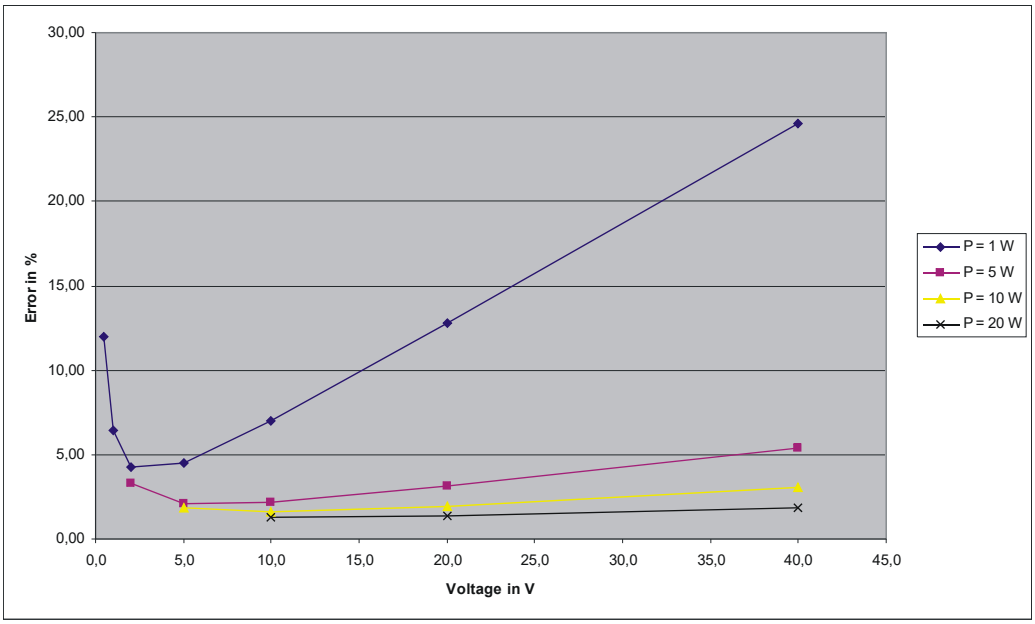

Figure 6-7: Error in „Constant Power“ mode in 3 A range

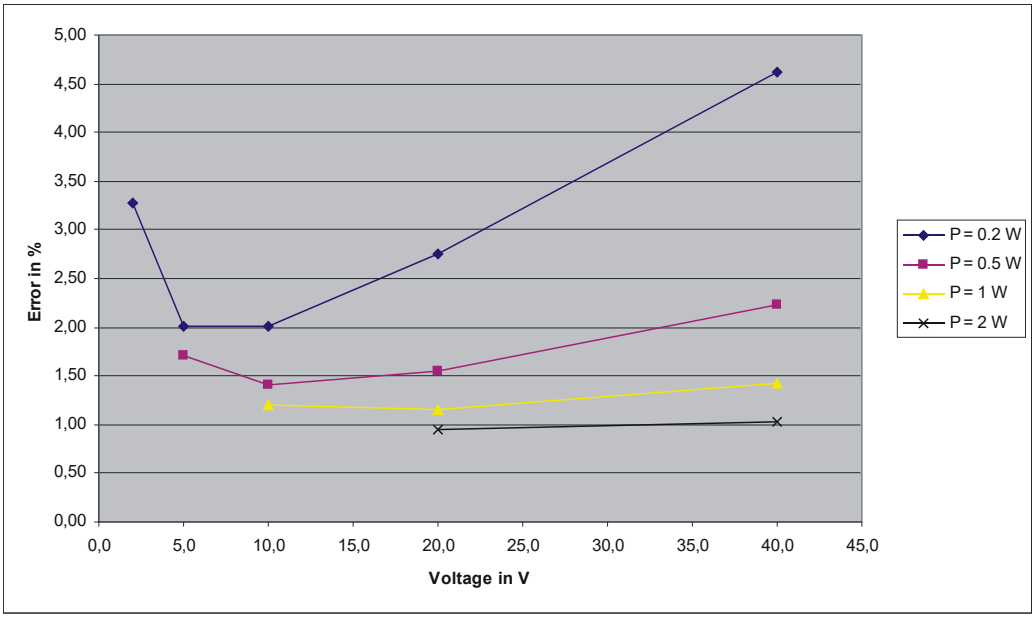

Figure 6-8: Error in „Constant Power“ mode in 100 mA range

6.6.6 Load simulation data

Table 6-5: Load simulation data

	Load channel data					
Voltage:	15 V			50 V		
Current:	0 - 10 mA	0 - 100 mA	0 - 3 A	0 - 10 mA	0 - 100 mA	0 - 3 A
Power:	20 W continous; 25 W peak					
Minimum voltage:	0,5 V	0,5 V	0,5 V	0,5 V	0,5 V	0,5 V
	Operation as constant current sink					
Range:	0 - 10 mA	0 - 100 mA	0 - 3 A	0 - 10 mA	0 - 100 mA	0 - 3 A
Resolution:	0.39 µA	3.7 µA	115 µA	0.39 µA	3.7 µA	115 µA
Accuracy[1]:	0.4% + 20 µA	0.4% + 200 µA	0.4% + 6 mA	0.4% + 20 µA	0.4% + 200 µA	0.4% + 6 mA
	Operation as resistance load					
Range:	50 Ω - 150 kΩ	5 Ω - 15 kΩ	2/3 Ω - 1,5 kΩ	50 Ω - 500 kΩ	5 Ω - 50 kΩ	2/3 Ω - 5 kΩ
Resolution:	1 mΩ	100 µΩ	10 µΩ	1 mΩ	100 µΩ	10 µΩ
	Operation as load with constant power					

Range:	50 µW - 0.15 W	0.5 mW - 1.5 W	5 mW - 20 W	50 µW - 0.5 W	0.5 mW - 5 W	5 mW - 20 W
Resolution:	100 nW	1 µW	10 µW	100 nW	1 µW	10 µW

[1] Accuracy: ±(% of set value + absolute value)

7 Software

7.1 Driver software

A LabWindows IVI driver is available to control the Power Supply/Load Module R&S TS-PSU that supports classes IVI DCPWR and IVI SWTCH. All other functions of the hardware are supported by specific extensions of the driver. The driver is a component of the ROHDE & SCHWARZ GTSL software. All functions of the driver are documented extensively in online Help and in the LabWindows/CVI Function Panels.

During driver installation, the following software modules are installed:

Table 7-1: Driver installation R&S TS-PSU

Module	Path	Comment
`rspsu.dll`	`<GTSL directory>\Bin`	Driver
`rspsu.chm`	`<GTSL directory>\Bin`	Help files
`rspsu.fp`	`<GTSL directory>\Bin`	LabWindows CVI Function Panel file, function panels for CVI development interface
`rspsu.sub`	`<GTSL directory>\Bin`	LabWindows CVI attribute file. This file is required by some „function panels“.
`rspsu.lib`	`<GTSL directory>\Bin`	Import Library
`rspsu.h`	`<GTSL directory>\Include`	Header file for the driver

To use the driver, the IVI and VISA libraries from National Instruments are necessary.

7.2 Softpanel

A "Soft-Panel" is included with the software package for R&S TS-PSU (see Figure 7-1). The Soft-Panel requires the support of the IVI driver. It makes it possible to operate the module interactively.

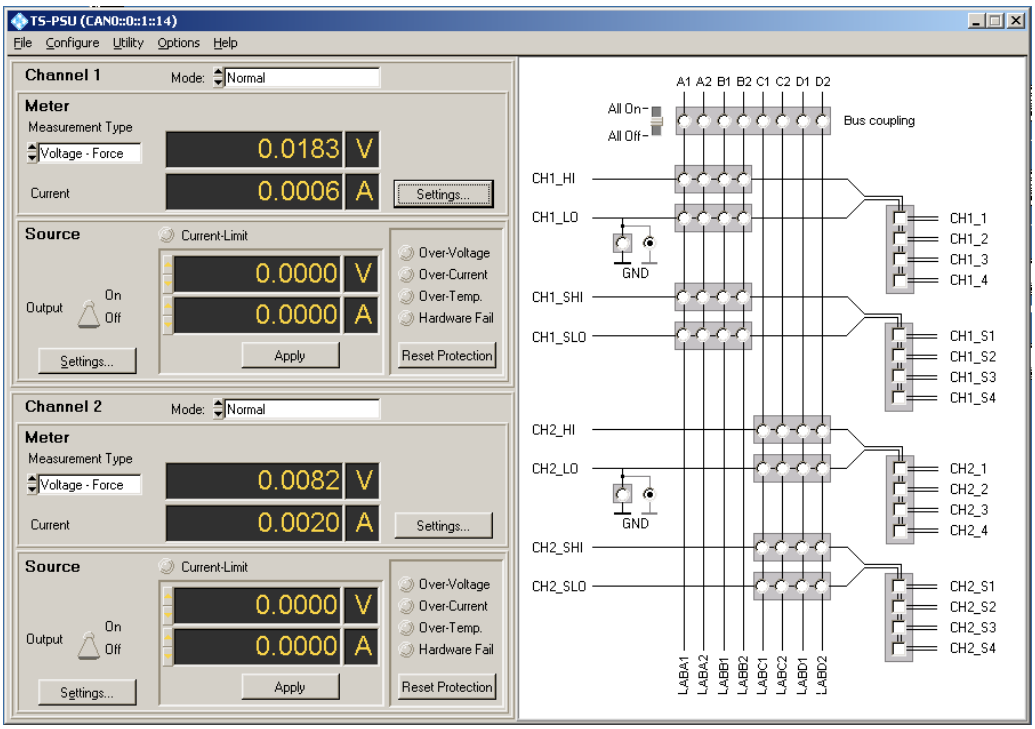

Figure 7-1: Softpanel R&S TS-PSU

The operation of the Softpanel is described in Chapter 13 of the “GTSL Software Description”.

7.2.1 Configuration of sources

Activating the "Settings..." button from the "Source" area calls the dialogue for configuring sources.

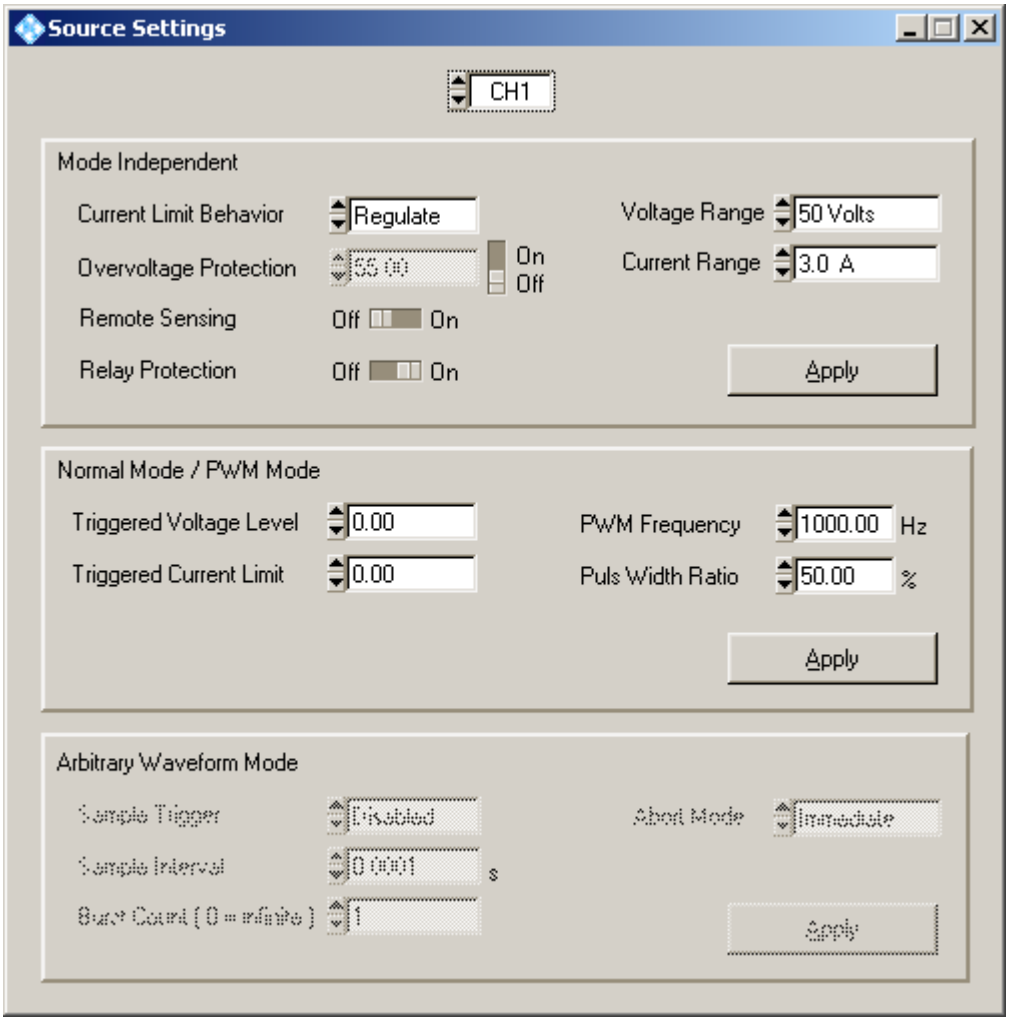

Figure 7-2: Configuration of sources

7.2.2 Configuration of measurement units

Activating the "Settings..." button from the "Meter" area calls the dialogue for configuring measurement units.

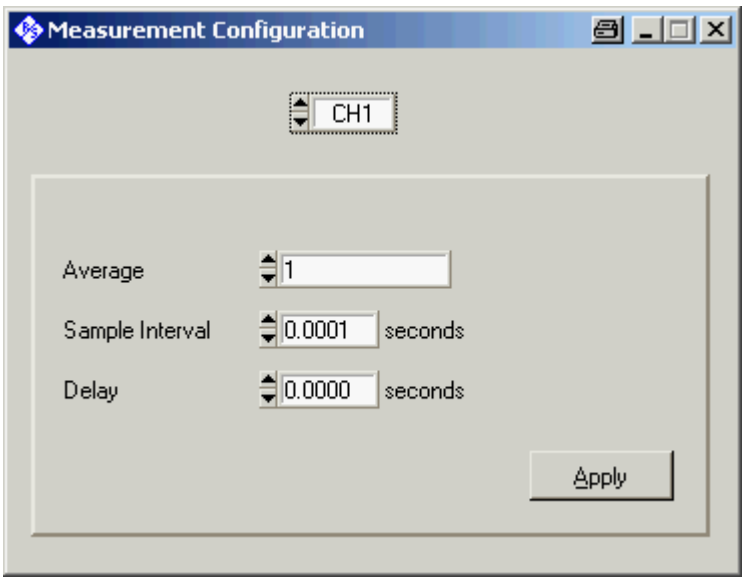

Figure 7-3: Configuration of measurement units

7.3 Sample programmes

7.3.1 Programming with GTSL libraries

```
/*
  This example connects channel 1 to the front connector, configures
  current limit and voltage, switches the source on and measures the
  output current.

  Error handling is not considered in this sample in order to
  keep it easy to read. The return status should be checked for
  "errorOccured" after each library call.

  The following configuration files are used in this example:

physical.ini
------------
[device->psu]
Type          = PSU
ResourceDesc = CAN0::0::1::12
DriverDll     = rspsu.dll
DriverPrefix = rspsu
DriverOption = "Simulate=0"
```

```
PsuApplication.ini
------------------
[bench->dcpwr]

; configure the TS-PSU as power supply
DcPwrSupply1 = device->psu
DcPwrChannelTable = io_channel->dcpwr

; configure the TS-PSU as switch device
SwitchDevice1 = device->psu
AppChannelTable = io_channel->switch

; configure the DC power channels
[io_channel->dcpwr]
CH1 = psu!CH1
CH2 = psu!CH2

; configure the switch channels
[io_channel->switch]
CH1   = psu!CH1
CH1_1 = psu!CH1_1

*/

#include "resmgr.h"
#include "dcpwr.h"
#include "swmgr.h"

int main (int argc, char *argv[])
{
  long residDcpwr;  /* resource ID for DC power supply library */
  long residSwmgr;  /* resource ID for switch manager library */

  short errorOccurred = 0;
  long errorCode = 0;
  char errorMessage [GTSL_ERROR_BUFFER_SIZE] = "";

  double result = 0.0;

  /* load the physical and application configuration files */
  RESMGR_Setup ( 0, "physical.ini", "PSUApplication.ini",
                 &errorOccurred, &errorCode, errorMessage);

  /* initialize the DC power supply library */
  DCPWR_Setup ( 0, "bench->dcpwr", &residDcpwr,
                &errorOccurred, &errorCode, errorMessage);

  /* initialize the switch manager library */
  SWMGR_Setup ( 0, "bench->dcpwr", &residSwmgr,
                &errorOccurred, &errorCode, errorMessage);
```

```
/* configure channel 1 earth tied */
DCPWR_Conf_Ground_Relay ( 0, residDcpwr, "CH1", 1,
                          &errorOccurred, &errorCode, errorMessage);

/* connect channel 1 to front connector */
SWMGR_Connect ( 0, residSwmgr, "CH1", "CH1_1",
                &errorOccurred, &errorCode, errorMessage);

/* set current limit range for channel 1 to 100.0 mA */
DCPWR_Conf_Output_Range ( 0, residDcpwr, "CH1", DCPWR_VAL_CURRENT, 100.0e-3,
                          &errorOccurred, &errorCode, errorMessage);

/* set current limit for channel 1 to 10 mA; current limit behavior is regulate */
DCPWR_Conf_Current_Limit ( 0, residDcpwr, "CH1", DCPWR_VAL_REGULATE, 10.0e-3,
                           &errorOccurred, &errorCode, errorMessage);

/* select voltage range 15 V*/
DCPWR_Conf_Output_Range ( 0, residDcpwr, "CH1", DCPWR_VAL_VOLTAGE, 15.0,
                          &errorOccurred, &errorCode, errorMessage);

/* set voltage to 10 V */
DCPWR_Conf_Voltage_Level ( 0, residDcpwr, "CH1", 10.0,
                           &errorOccurred, &errorCode, errorMessage);

/* wait until relays have settled; timeout 500 ms */
SWMGR_WaitForDebounce ( 0, residSwmgr, 500,
                        &errorOccurred, &errorCode, errorMessage);

/* switch on channel 1 */
DCPWR_Conf_Output_Enabled ( 0, residDcpwr, "CH1", 1,
                            &errorOccurred, &errorCode, errorMessage);

/* configure the measurement: Sample Count 40, Sample Interval 1 ms, Delay 0.0 */
DCPWR_Conf_Measurement ( 0, residDcpwr, "CH1", 40, 1.0e-3, 0.0,
                         &errorOccurred, &errorCode, errorMessage);

/* measure the output current */
DCPWR_Measure ( 0, residDcpwr, "CH1", DCPWR_VAL_CURRENT, &result,
                &errorOccurred, &errorCode, errorMessage);

/* switch off channel 1 */
DCPWR_Conf_Output_Enabled ( 0, residDcpwr, "CH1", 0,
                            &errorOccurred, &errorCode, errorMessage);

/* disconnect all */
SWMGR_DisconnectAll ( 0, residSwmgr,
                      &errorOccurred, &errorCode, errorMessage);

/* configure channel 1 earth free again */
```

```
  DCPWR_Conf_Ground_Relay ( 0, residDcpwr, "CH1", 0,
                            &errorOccurred, &errorCode, errorMessage);

  /* close the libraries */
  SWMGR_Cleanup ( 0, residSwmgr,
                  &errorOccurred, &errorCode, errorMessage);

  DCPWR_Cleanup ( 0, residDcpwr,
                  &errorOccurred, &errorCode, errorMessage);

  RESMGR_Cleanup ( 0, &errorOccurred, &errorCode, errorMessage);

  return 0;
}
```

7.3.2 Programming with device drivers

```
/*
  This example connects channel 1 to the front connector, configures
  current limit and voltage, switches the source on and measures the
  output current.

  Error handling is not considered in this sample in order to
  keep it easy to read. The return status should be checked for
  VI_SUCCESS after each driver call.
*/

#include "rspsu.h"

int main (int argc, char *argv[])
{
  ViSession vi;
  ViStatus  status;
  ViReal64  result;

  /*
    open a session to the device driver. The resource descriptor
    depends on the slot number of the module and must be adapted
    to the target system.
  */
  status = rspsu_InitWithOptions ("CAN0::0::2::5::INSTR",
                                  VI_TRUE,
                                  VI_TRUE,
                                  "Simulate=0,RangeCheck=1",
                                  &vi);

  /* configure channel 1 earth tied */
  status = rspsu_ConfigureGround (vi, "CH1", VI_TRUE);
```

```
  /* connect channel 1 to front connector */
  status = rspsu_Connect (vi, "CH1", "CH1_1");

  /* set current limit range for channel 1 to 100.0 mA */
  status = rspsu_ConfigureOutputRange (vi, "CH1", RSPSU_VAL_RANGE_CURRENT, 100.0E-3);

  /* set current limit for channel 1 to 10 mA; current limit behavior is regulate */
  status = rspsu_ConfigureCurrentLimit (vi, "CH1", RSPSU_VAL_CURRENT_REGULATE, 10.0E-3);

  /* select voltage range 15 V*/
  status = rspsu_ConfigureOutputRange (vi, "CH1", RSPSU_VAL_RANGE_VOLTAGE, 15.0);

  /* set voltage to 10 V */
  status = rspsu_ConfigureVoltageLevel (vi, "CH1", 10.0);

  /* wait until relays have settled; timeout 500 ms */
  status = rspsu_WaitForDebounce (vi, 500);

  /* switch on channel 1 */
  status = rspsu_ConfigureOutputEnabled (vi, "CH1", VI_TRUE);

  /* configure the measurement: Sample Count 40, Sample Interval 1 ms, Delay 0.0 */
  status = rspsu_ConfigureMeasurement (vi, "CH1", 40, 0.001, 0.0);

  /* measure the output current */
  status = rspsu_Measure (vi, "CH1", RSPSU_VAL_MEASURE_CURRENT, & result);

  /* switch off channel 1 */
  status = rspsu_ConfigureOutputEnabled (vi, "CH1", VI_FALSE);

  /* disconnect all */
  status = rspsu_DisconnectAll(vi);

  /* configure channel 1 earth free again */
  status = rspsu_ConfigureGround (vi, "CH1", VI_FALSE);

  /* close the driver session */
  status = rspsu_close (vi);

  return 0;
}
```

8 Maintenance, storage and disposal

8.1 Storage

Protect the product against dust. Ensure that the environmental conditions, e.g. temperature range and climatic load, meet the values specified in the data sheet.

8.2 Disposal

Rohde & Schwarz is committed to making careful, ecologically sound use of natural resources and minimizing the environmental footprint of our products. Help us by disposing of waste in a way that causes minimum environmental impact.

Disposing electrical and electronic equipment

A product that is labeled as follows cannot be disposed of in normal household waste after it has come to the end of its service life. Even disposal via the municipal collection points for waste electrical and electronic equipment is not permitted.

Figure 8-1: Labeling in line with EU directive WEEE

Rohde & Schwarz has developed a disposal concept for the eco-friendly disposal or recycling of waste material. As a manufacturer, Rohde & Schwarz completely fulfills its obligation to take back and dispose of electrical and electronic waste. Contact your local service representative to dispose of the product.

9 Troubleshooting

If the system is not running properly, try to find the problem with the following tests. If the tests do not help to locate the problem, contact your Rohde & Schwarz service representative.

9.1 LED test

The module has five LEDs on its front panel that indicate its status.

After turning on the system, all LEDs light up for a short time to indicate that the power supply is present and that all LEDs are working.

- A single LED does not light up in that time frame:
  Indicates a faulty LED or faulty LED control.
- All LEDs do not light up during that time frame:
  Indicates that the power supply for the module is faulty.
  Check the status LEDs of the main power supply module in slot A3 and A4.

For rear modules, you have to check the LEDs separately, see "Power-on test for modules with a rear I/O supply module" on page 54.

9.2 Power-on test

The power-on test runs at the same time as the LED test. The following statements can be made regarding the different display states of the LEDs.

- "PWR LED" (green LED) = on
  Indicates that all power supply voltages are present.
- "PWR LED" (green LED) = off
  Indicates that at least one power supply voltage is missing.
- "ERR LED" (red LED) = off
  If the green LED is illuminated at the same time, indicates that the system is working without any errors.
- "ERR LED" (red LED) = on (or blinking)
  Indicates a hardware problem.
- "CH1 LED" / "CH2 LED" (yellow LED) = off
  Indicates that the system is working without any errors.
- "CH1 LED" / "CH2 LED" (yellow LED) = blinking
  Indicates that the channel is inactive due to an error, for example an AC/DC converter that is not running.

If you turn on the AC/DC converter after the module has booted, reset the module in the softpanel (see Chapter 7.2, "Softpanel", on page 44).

Power-on test for modules with a rear I/O supply module

If the green LED indicates a problem with the supply voltage, check the LEDs of the corresponding rear I/O supply module separately. If the LEDs on the rear I/O module also indicate a supply voltage failure, replace the rear I/O module.

9.3 R&S TSVP self-test

The R&S TSVP self-test is an extensive test procedure for the whole system or individual components. After the test is done, you receive a test report for all components that have been tested.

The self-test uses the R&S TS-PSAM module as a measurement unit. The functionality of the modules in the system is ensured by measurements via the analog measurement bus.

For more information about running the system self-test and the test procedures, refer to the R&S TSVP service manual.

9.4 Contacting customer support

Technical support – where and when you need it

For quick, expert help with any Rohde & Schwarz product, contact our customer support center. A team of highly qualified engineers provides support and works with you to find a solution to your query on any aspect of the operation, programming or applications of Rohde & Schwarz products.

Contact information

Contact our customer support center at www.rohde-schwarz.com/support, or follow this QR code:

Figure 9-1: QR code to the Rohde & Schwarz support page

Annex

A Specifications

For an overview of technical specifications of the R&S TS-PSU module, refer to the corresponding product brochure / data sheet.

If discrepancies exist between information in this manual and the values in the data sheet, the values in the data sheet take precedence.

B Block diagram

Figure B-1shows a simplified functional block diagram of the Power Supply/Load Module R&S TS-PSU. This functional block diagram represents the three modules of the R&S TS-PSU.

- PSU power module
- PSU RIO module
- PSU AC/DC converter

Figure B-2shows a block diagram of the Power Supply/Load Module R&S TS-PSU (PSU power module and PSU RIO module).

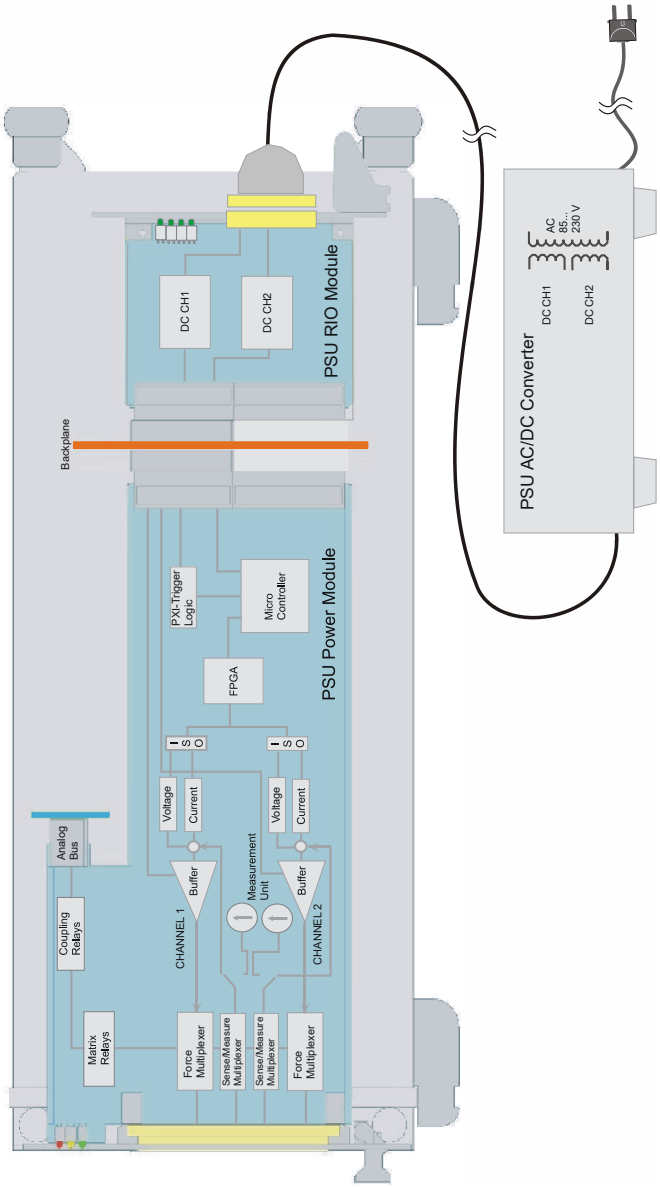

Figure B-1: Functional block diagram R&S TS-PSU

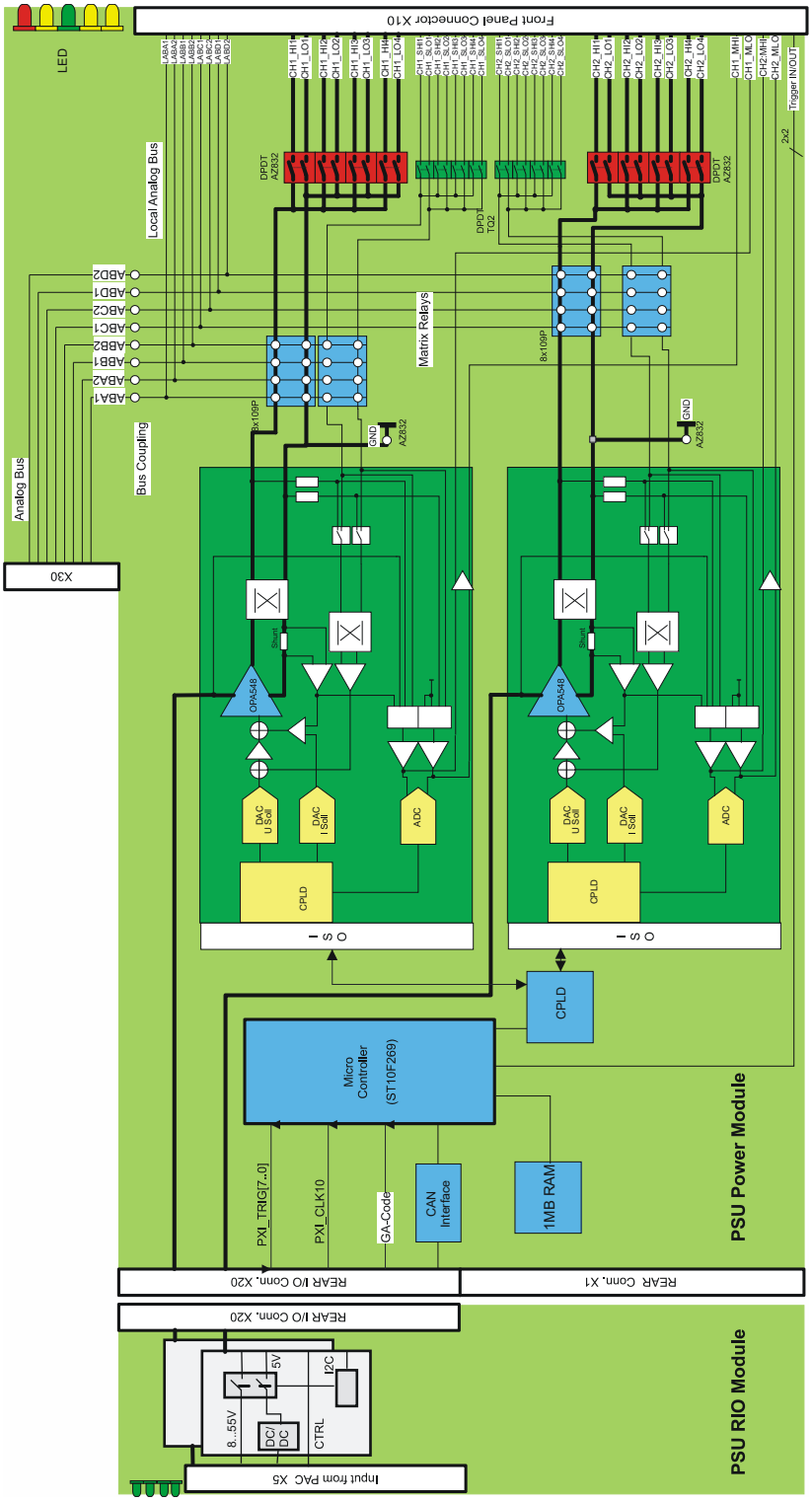

Figure B-2: Block diagram R&S TS-PSU

C Interface description

C.1 PSU power module

C.1.1 Connector X1

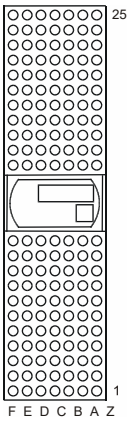

Figure C-1: Connector X1 (view: mating side)

Pin	F	E	D	C	B	A	Z
25	GND	+5V				+5V	GND
24	GND				+5V		GND
23	GND		+5V				GND
22	GND				GND		GND
21	GND						GND
20	GND				GND		GND
19	GND		GND				GND
18	GND				GND		GND
17	GND		GND				GND
16	GND				GND		GND
15	GND		GND				GND
12..14							
11	GND		GND				GND
10	GND				GND		GND
9	GND		GND				GND
8	GND				GND		GND
7	GND		GND				GND
6	GND				GND		GND
5	GND		GND				GND
4	GND				GND		GND
3	GND		+5V				GND
2	GND				+5V		GND
1	GND	+5V				+5V	GND
Pin	F	E	D	C	B	A	Z

Figure C-2: Assignment of X1

C.1.2 Connector X10

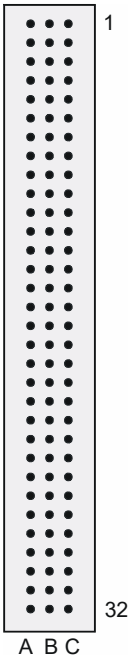

Figure C-3: Connector X10 (view: mating side)

Table C-1: Assignment of x10

Pin	A	B	C
1	LABA1	GND	LABA2
2	LABB1	GND	LABB2
3	LABC1	GND	LABC2
4	LABD1	GND	LABD2
5			
6	CH1_HI1	CH1_HI1	CH1_HI1
7	CH1_LO1	CH1_LO1	CH1_LO1
8	CH1_HI2	CH1_HI2	CH1_HI2
9	CH1_LO2	CH1_LO2	CH1_LO2
10	CH1_HI3	CH1_HI3	CH1_HI3
11	CH1_LO3	CH1_LO3	CH1_LO3
12	CH1_HI4	CH1_HI4	CH1_HI4
13	CH1_LO4	CH1_LO4	CH1_LO4
14	CH1_SHI1		CH1_SLO1
15	CH1_SHI2	CH1_MHI	CH1_SLO2
16	CH1_SHI3	CH1_MLO	CH1_SLO3
17	CH1_SHI4		CH1_SLO4
18	CH2_HI1	CH2_HI1	CH2_HI1
19	CH2_LO1	CH2_LO1	CH2_LO1
20	CH2_HI2	CH2_HI2	CH2_HI2
21	CH2_LO2	CH2_LO2	CH2_LO2
22	CH2_HI3	CH2_HI3	CH2_HI3
23	CH2_LO3	CH2_LO3	CH2_LO3
24	CH2_HI4	CH2_HI4	CH2_HI4
25	CH2_LO4	CH2_LO4	CH2_LO4
26	CH2_SHI1		CH2_SLO1
27	CH2_SHI2	CH2_MHI	CH2_SLO2
28	CH2_SHI3	CH2_MLO	CH2_SLO3
29	CH2_SHI4		CH2_SLO4
30			
31	XTI1	XTI2	GND
32	XTO1	XTO2	CHA_GND

The CHA_GND signal is connected with the front plate of the module and via two 10 nF capacitors with GND. The front plate itself has no direct connection to GND. When a test object is connected, the test object GND should be connected to GND. To avoid ripple loops, do not connect GND and CHA_GND.

C.1.3 Connector X20

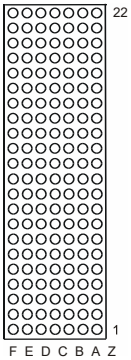

Figure C-4: Connector X20 (view: mating side)

Pin	F	E	D	C	B	A	Z
22		GA0	GA1	GA2	GA3	GA4	
21					GA5		
20		+5V (PWA)	GND	+5V (PWA)			
19				+5V (PWA)	GND		
18		PXI_TRIG6	CAN_EN in PCA3 V4.0	PXI_TRIG5	PXI_TRIG4	PXI_TRIG3	
17		PXI_CLK10			GND	PXI_TRIG2	
16		PXI_TRIG7	GND		PXI_TRIG0	PXI_TRIG1	
15			+5V (PWA)		GND		
14							
13							
12	NP	PGND1	PACCTL_CH1	+5VRIO_CH1		+VPA_CH1	NP
11	NP						NP
10		PGND2	PACCTL_CH2	+5VRIO_CH2		+VPA_CH2	
9					+VPA_CH2	+VPA_CH2	
8		PGND1	PGND1	PGND1			
7					+VPA_CH1	+VPA_CH1	
6		PGND2	PGND2	PGND2			
5							
4							
3			RRST#		GND	RSDO	
2			RSDI			RSCLK	
1		+5V (PWA)	CAN_L	CAN_H	GND	RCS#	
Pin	F	E	D	C	B	A	Z

Figure C-5: Assignment of X20 (NP = not populated)

C.1.4 Connector X30

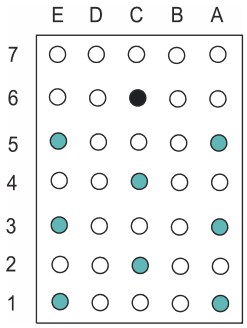

Figure C-6: Connector X30 (mating side)

Table C-2: X30 pinning schedule

Pin	E	D	C	B	A
7					
6			GND		
5	ABC1				ABA1
4			ABB1		
3	ABC2				ABB2
2			ABA2		
1	ABD2				ABD1

C.2 PSU RIO module

C.2.1 Connector X5 at PAC 100W2 (1504.4553.02)

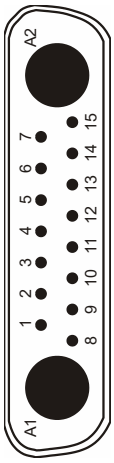

Figure C-7: Connector X5 (view: mating side)

Table C-3: Assignment of x5

Pin	Signal
1	PACCTRL CH2
2	8-55V CH1
3	8-55V CH2
4	COM CH1
5	COM CH2
6	Uh CH1 (voltage for 5 V Step-Down)
7	Uh CH2 (voltage for 5 V Step-Down)
8	PACCTRL CH1
9	8-55V CH1
10	8-55V CH2
11	COM CH1
12	COM CH2
13	NC
14	CTR-COM CH2
15	CTR-COM CH1

C.2.2 Connector X5 at PAC 100W2 V535 (1504.4553.03)

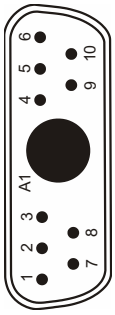

Figure C-8: Connector X5 (view: mating side)

Table C-4: Assignment of x5

Pin	Signal
1	PACCTRL CH1
2	COM CH1
3	PAC PWR1
4	PAC PWR2
5	COM CH2
6	PACCTRL CH2
A1	NC (key)
7	CTR-COM CH1
8	COM CH1
9	COM CH2
10	CTR-COM CH2

C.2.3 Connector X20

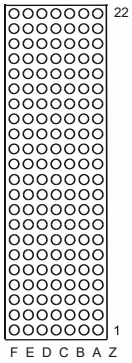

Figure C-9: Connector X20 (view: mating side)

Pin	Z	A	B	C	D	E	F
22		GA4	GA3	GA2	GA1	GA0	
21			GA5				
20				+5V (PWA)	GND	+5V (PWA)	
19			GND	+5V (PWA)			
18		PXI_TRIG3	PXI_TRIG4	PXI_TRIG5	CAN_EN in PCA3 V4.0	PXI_TRIG6	
17		PXI_TRIG2	GND			PXI_CLK10	
16		PXI_TRIG1	PXI_TRIG0		GND	PXI_TRIG7	
15			GND		+5V (PWA)		
14							
13							
12	NP	+VPA_CH1		+5VRIO_CH1	PACCTL_CH1	PGND1	NP
11	NP						NP
10		+VPA_CH2		+5VRIO_CH2	PACCTL_CH2	PGND2	
9		+VPA_CH2	+VPA_CH2				
8				PGND1	PGND1	PGND1	
7		+VPA_CH1	+VPA_CH1				
6				PGND2	PGND2	PGND2	
5							
4							
3		RSDO	GND		RRST#		
2		RSCLK			RSDI		
1		RCS#	GND	CAN_H	CAN_L	+5V (PWA)	
Pin	Z	A	B	C	D	E	F

Figure C-10: Assignment of X20 (NP = not populated)

C.3 PSU AC/DC converter

C.3.1 Connector X5 at PAC 100W2 (1504.4553.02)

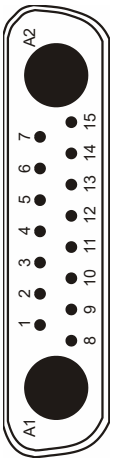

Figure C-11: Connector X5 (view: mating side)

Table C-5: Assignment of x5

Pin	Signal
1	PACCTRL CH2
2	8-55V CH1
3	8-55V CH2
4	COM CH1
5	COM CH2
6	Uh CH1 (voltage for 5 V Step-Down)
7	Uh CH2 (voltage for 5 V Step-Down)
8	PACCTRL CH1
9	8-55V CH1
10	8-55V CH2
11	COM CH1
12	COM CH2
13	NC
14	CTR-COM CH2
15	CTR-COM CH1

C.3.2 Connector X5 at PAC 100W2 V535 (1504.4553.03)

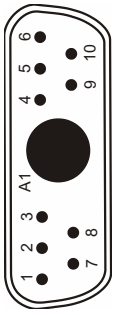

Figure C-12: Connector X5 (view: mating side)

Table C-6: Assignment of x5

Pin	Signal
1	PACCTRL CH1
2	COM CH1
3	PAC PWR1
4	PAC PWR2
5	COM CH2

Pin	Signal
6	PACCTRL CH2
A1	NC (key)
7	CTR-COM CH1
8	COM CH1
9	COM CH2
10	CTR-COM CH2