ATSC Mobile DTV

High-definition reception at home | Robust mobile reception anywhere

ATSC Mobile DTV has been designed to provide a reliable digital TV signal, that can be received by mobile devices (laptops, portable media players or navigation devices) whether the consumer is on the highway, on the green, in a shopping mall or even at home. The broadcaster can offer localized services, such as news, traffic information or weather, to offer viewers the content they want, when they want it.

ATSC Mobile DTV (A/153) includes and enhances ATSC A/53 and therefore is fully backwards compatible. It shares the same RF channel as the standard ATSC broadcast service described in ATSC A/53 and is coupled with a chain of extremely complex FEC mechanisms (Reed-Solomon and turbo codes) and training sequences for the receiver equalizer.

The standard is optimized for stationary reception of high-quality services at home on the one hand and robust mobile reception on the other. In total, a data rate of 19.39 Mbps is available for dual transmission. The video content is compressed using efficient H.264 (MPEG-4 AVC) video and HE AAC v2 audio coding. The video format is fixed to 416 pixel × 240 lines (16:9) to meet the requirements for mobile devices. Mobile data is transported by means of the Internet protocol (IP) mechanism.

The existing ATSC transmission chain has to be upgraded for the new mobile services. Audio and video signals for these services have to be inserted into a mobile TV MPEG-4 encoder. The data related to such additional mobile services will be provided by an optional OMA BCAST ESG via IP.

The ATSC-M/H emission multiplexer, which is placed between the ATSC multiplexer and the transmitter, restructures the main ATSC transport stream (TS), generates ATSC-M/H specific signaling, multiplexes IP streams for mobile services and main ATSC TS into ATSC-M/H TS.

The transmitter has to be upgraded with an ATSC-M/H capable software or exciter, which can also be synchronized with other transmitters to build an single frequency network (SFN).

Rohde & Schwarz offers a complete product portfolio for this new mobile DTV standard – from signal generators, demodulators and analyzers via encoders, multiplexers to transmitters.

ATSC Mobile DTV system overview

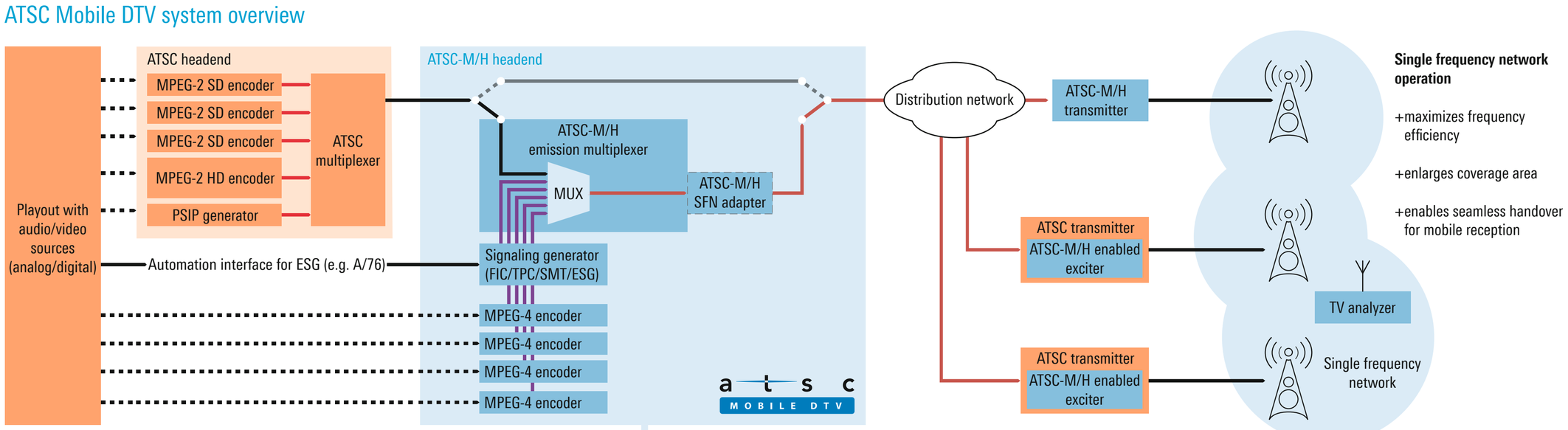

ATSC-M/H MPEG-2 transport stream structure

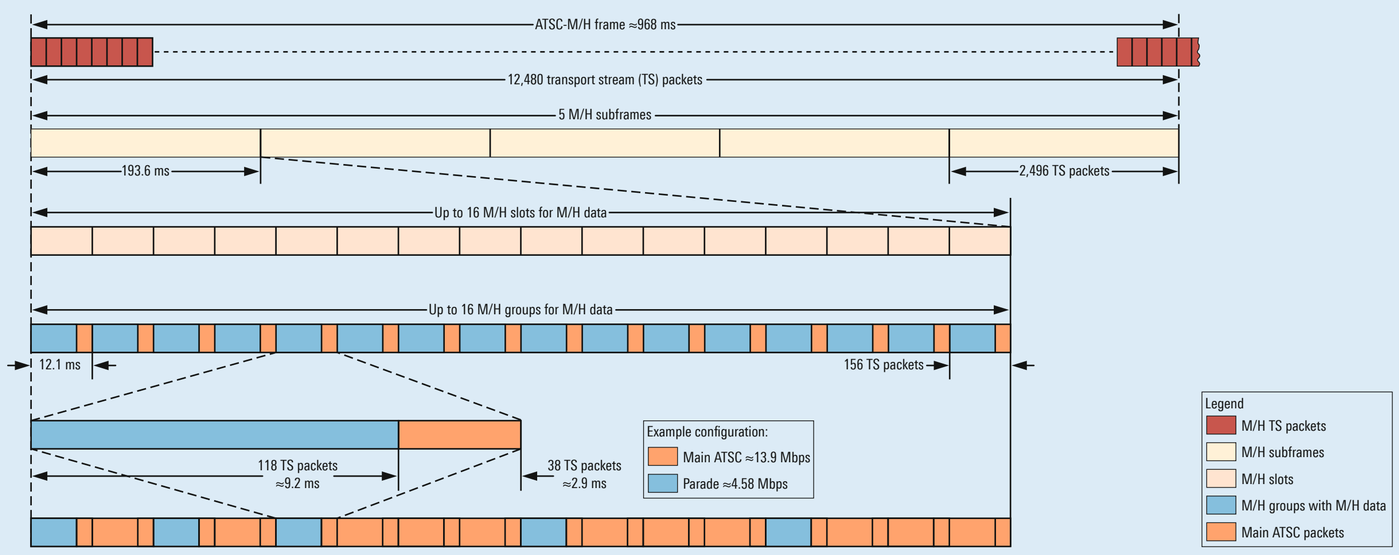

ATSC-M/H layer model

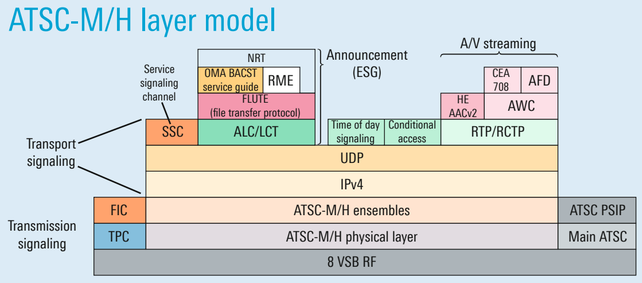

Examples for data rate allocation

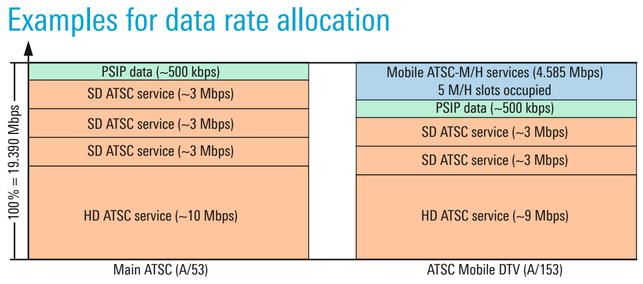

Glossary:
AAC = Advanced Audio Coding (MPEG-4 Part 3); **AFD =** Active Format Description; **ALC =** Advanced Layered Coding; ATSC-**M/H =** Advanced Television Systems Committee Mobile/Handheld (A/153); **AVC =** Advanced Video Coding (H.264/MPEG-4 Part 10); **CAS =** Conditional Access System; **CEA =** Consumer Electronics Association; **ESG =** Electronic Service Guide; **FEC =** Forward Error Correction; **FIC =** Fast Information Channel; **FLUTE =** File Delivery over Unidirectional Transport (RFC 3926); **HE AACv2** = High Efficiency Advanced Audio Coding Version 2; **IP =** Internet Protocol; **LCT =** Layered Coding Transport; **NRT =** Non Realtime Transmission; OMA **BCAST =** Open Mobile Alliance Broadcast; **PCCC =** Parallel Concatenated Convolutional Code; **PSIP =** Program and System Information Protocol; **RF =** Radio Frequency; **RME =** Rich Media Environment; **RS =** Reed-Solomon; **RTCP =** RTP Control Protocol; **RTP =** Realtime Transport Protocol; **SCCC =** Serial Concatenated Convolutional Code; **SDP =** Session Description Protocol; **SLT =** Service Labeling Table for ATSC-M/H; **SMT =** Service Map Table for ATSC-M/H; **SSC =** Service Signaling Channel; **TOD =** Time of Day; **TPC =** Transmission Parameter Channel; **UDP =** User Datagram Protocol; **VSB =** Vestigial Sideband

Rohde & Schwarz broadcast equipment for ATSC Mobile DTV

R&S®BTC Broadcast test center
Reference signal generator with audio/video analysis functions

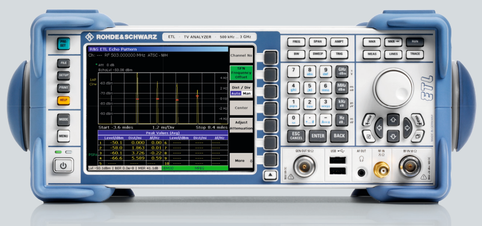

R&S®ETL TV analyzer
The universal multistandard platform for the analysis of TV and mobile TV signals

R&S®AEM100 ATSC-M/H emission multiplexer
Complete solution for upgrading to ATSC Mobile DTV

R&S®AVE264 mobile TV audio and video encoder

Rohde & Schwarz TV transmitters
Complete range of ATSC Mobile DTV compliant transmitters, fully SFN-enabled

PD 5213.9392.82 V 02.00 (as)

www.rohde-schwarz.com

ROHDE & SCHWARZ